WAYNE COMBUSTION SYSTEMS
801 GLASGOW AVE.
FORT WAYNE, IN 46803

PHONE: (260) 425-9200
(855) WAYNECS
(800) 443-4625
FAX: (260) 424-0904

www.waynecombustion.com

LC1500

Gas Burner

Manual 63791-001 | Revision G | Publication Date: 6/9/2014

SPECIFICATIONS

Burner Model: LC1500
Minimum Input: 700 MBtu/hr (205 kW)
Maximum Input: 1.5MMBtu/hr (440 kw)
Standard Voltage: 120 VAC / 60 Hz 1 Phase
Supply Line Pressure Required: (see Figure 2)

Mounting Flange: Fixed Flange
Air Tube Diameter: 5.75 inches (146 mm) Maximum
Air Tube Insertions: 5 inches (127 mm) Maximum with 6 inch (152 mm) Air Tube.
9 inches (229 mm) Maximum with 10 inch (254 mm) Air Tube.
Flame Safety: 24 VAC Single-Rod Gas Primary

Ignition: 6,000 VAC Direct Spark Ignition. Standard burners are shipped with the ignition transformer mounted to the burner. If the transformer is to be remotely mounted, the ignition wire must not exceed 36" (914.4mm) per UL795.

De-rate maximum input for altitude over 2000 ft. (610 m) by 4% each 1000 ft. (305 m) above sea level.

INSTALLATION OF BURNER

INSTALLATION OF THE BURNER MUST BE DONE BY A QUALIFIED INSTALLER IN ACCORDANCE WITH REGULATIONS OF THE NATIONAL FUEL GAS CODE ANSI Z223.1/NFPA 54, AND IN COMPLETE ACCORDANCE WITH ALL LOCAL CODES AND AUTHORITIES HAVING JURISDICTION.

INCORRECT INSTALLATION, ADJUSTMENT, OR MISUSE OF THIS BURNER COULD RESULT IN DEATH, SEVERE PERSONAL INJURY, OR SUBSTANTIAL PROPERTY DAMAGE AND WILL VOID THE WARRANTY.

A QUALIFIED INSTALLER IS THE PERSON WHO IS RESPONSIBLE FOR THE INSTALLATION AND ADJUSTMENT OF THE EQUIPMENT AND WHO IS LICENSED TO INSTALL GAS-BURNING EQUIPMENT IN ACCORDANCE WITH ALL CODES AND ORDINANCES.

THESE INSTRUCTIONS SHOULD BE AFFIXED TO THE BURNER OR ADJACENT TO THE HEATING APPLIANCE.

INSTALLATION LOG			
BURNER MODEL:	**SPECIFICATION NUMBER:**	**FUEL (NATURAL OR PROPANE):**	**GAS ORIFICE DRILLED SIZE:**
INLET GAS PRESSURE (in. w.c.):	**CO_2 (%):**	**O_2(%):**	**CO (PPM):**
INSTALLER'S NAME:	**CONTRACTOR NAME:**	**CONTRACTOR ADDRESS:**	**CONTRACTOR PHONE NUMBER:**
CONTRACTOR LICENSE #:	**DATE OF INSTALLATION:**		
COMMENTS ABOUT INSTALLATION/START UP:			

BURNER/APPLIANCE SERVICE LOG				
SERVICE DATE	**TECHNICIAN**	**COMPANY / ADDRESS**	**CONTRACTOR LICENSE #**	**WORK PERFORMED**
/ /				
/ /				
/ /				
/ /				
/ /				
/ /				
/ /				
/ /				
/ /				
/ /				
/ /				
/ /				
/ /				
/ /				
/ /				
/ /				
/ /				
/ /				

⚠ WARNING **If the information in these instructions is not followed exactly, a fire or explosion may result causing property damage, personal injury**

FOR YOUR SAFTEY: **DO NOT STORE OR USE GASOLINE OR OTHER FLAMMABLE VAPORS AND LIQUIDS IN THE VINCINITY OF THIS OR ANY OTHER APPLIANCE.**

WHAT TO DO IF YOU SMELL GAS:

1. **Open Windows.**
2. **Do not try to light any appliances.**
3. **Do not touch electrical switches; do not use any phone in your building.**
4. **Extinguish any open flame.**
5. **Immediately call your gas supplier from a neighbor's phone. Follow the gas supplier's instructions.**
6. **If you cannot reach your gas supplier, call the fire department.**

⚠ WARNING

ELECTRIC SHOCK HAZARD

HIGH VOLTAGES ARE PRESENT IN THIS EQUIPMENT. FOLLOW THESE RULES TO AVOID ELECTRIC SHOCK

1. Use only a properly grounded circuit. A ground fault interrupter is recommended.
2. Do not spray water directly on burner.
3. Turn off power before servicing.
4. Read the owner's manual before using.

⚠ WARNING

OVERHEATING HAZARD

SHOULD OVERHEATING OCCUR:

1. Shut off the manual gas valve to the appliance.
2. Do not shut off the control switch to the blower.

⚠ WARNING

CARBON MONOXIDE POISONING HAZARD

CARBON MONOXIDE IS A COLORLESS, ODORLESS GAS THAT CAN KILL. FOLLOW THESE RULES TO CONTROL CARBON MONOXIDE.

1. Do not use this burner if in an unvented, enclosed area. Carbon monoxide may accumulate.
2. Do not misadjust the pressure regulator. High pressures produce carbon monoxide.
3. Check flue gases for carbon monoxide. This check requires specialized equipment.
4. Allow only qualified burner service persons to adjust the burner. Special instruments and training are required.
5. Read the owner's manual before using.

CONTENTS

PAGE

SECTION I INSTALLATION

A. GENERAL. 5
B. VENTILATION 5
C. MOUNTING TO EQUIPMENT. 5
D. GAS PIPING 5
E. ELECTRICAL SUPPLY. 7
F. MAIN BURNER INSTALLATION 7
G.120VAC SOLENOID SHUT-OFF GAS VALVE(S) 11
H. PRESSURE REGULATOR ADJUSTMENT. 11
I. GAS PRESSURE SWITCHES 12

SECTION II INITIAL START UP. 13

SECTION III OPERATION AND TROUBLESHOOTING. 16

SECTION IV SERVICE 33

TECHNICAL INFORMATION 38

DRAWINGS & PARTS LIST. 40

WARRANTY 62

CONSUMER INSTRUCTIONS 63

SECTION I
INSTALLATION

A. GENERAL

Installation of these power gas burners must conform to local codes, or in their absence, the National Fuel Gas Code, ANSI Z223.1/NFPA 54.

In CANADA, "The equipment shall be installed in accordance with the Provincial Installation Requirements, or in their absence, the CGA B149.1 and B149.2 Installation Codes shall prevail." Authorities having jurisdiction should be consulted before installations are made.

NOTICE: ANSI or local installation code compliance is the sole responsibility of the qualified installer.

B. VENTILATION

The LC1500 burner models covered by this manual shall not be installed in an appliance located where normal air circulation or infiltration is limited in providing all the air necessary for proper combustion and draft hood dilution air.

When the heating appliance is installed in a tightly closed room without ventilation openings to outdoors, or other rooms, provisions shall be made for supplying air for combustion through special openings, one near the floor line and the other near the ceiling. Each is to be sized on the basis of one square inch (645.2 mm^2) or more of free area each 1,000 BTU (0.29 kW) input per hour.

C. MOUNTING TO EQUIPMENT

THE BURNER AIR TUBE MUST NOT BE ALLOWED TO EXTEND INTO THE CHAMBER PROPER; IT MUST BE SET 1/8 INCH (3.2 MM) SHORT OF THE INSIDE SURFACE.

Before permanently securing the burner to the heating appliance with the mounting flange or cementing around the air tube in the combustion chamber opening, check that the burner head assembly is free of foreign materials and that the sensor and electrode probes have not been damaged or repositioned, see Figure 1.

A flange adaptor kit, part number 63856-SER, is available for applications that require shorter insertion depths or a different bolt pattern. See figure 30.

D. GAS PIPING

NOTICE: All piping must comply with state and/or local codes. The available gas supply pressure should be within minimum and maximum pressures shown in the burner specifications. If the gas supply pressure exceeds the 28" w.c. (7 kPa) maximum, an intermediate main gas regulator must be installed ahead of the main gas manual shutoff valve.

WARNING: Failure to install the intermediate gas regulator will result in gas leakage from burner gas valve.

The gas supply piping to the burner should branch off from the main gas supply line as close to the gas meter as possible. Do not connect to the bottom of a horizontal section.

Use new black iron pipe and malleable fittings free from burrs and defects. Use pipe joint compound resistant to liquefied petroleum gases.

A 1/8" NPT plugged tapping accessible for test gauge connection shall be provided immediately upstream of the gas supply pressure connection for determining gas supply pressure to the burner. Test new supply piping for leaks. **CAUTION: DURING PRESSURE TEST FOR LEAKS IN SUPPLY PIPING, THE BURNER GAS TRAIN MUST BE DISCONNECTED TO PREVENT EXPOSING THE COMBUSTION GAS VALVE TO PRESSURES 1 PSIG (6.9 KPaG) POSSIBLY DAMAGING THE VALVE AND VOIDING THE BURNER WARRANTY**.

ELECTRODE SETTINGS

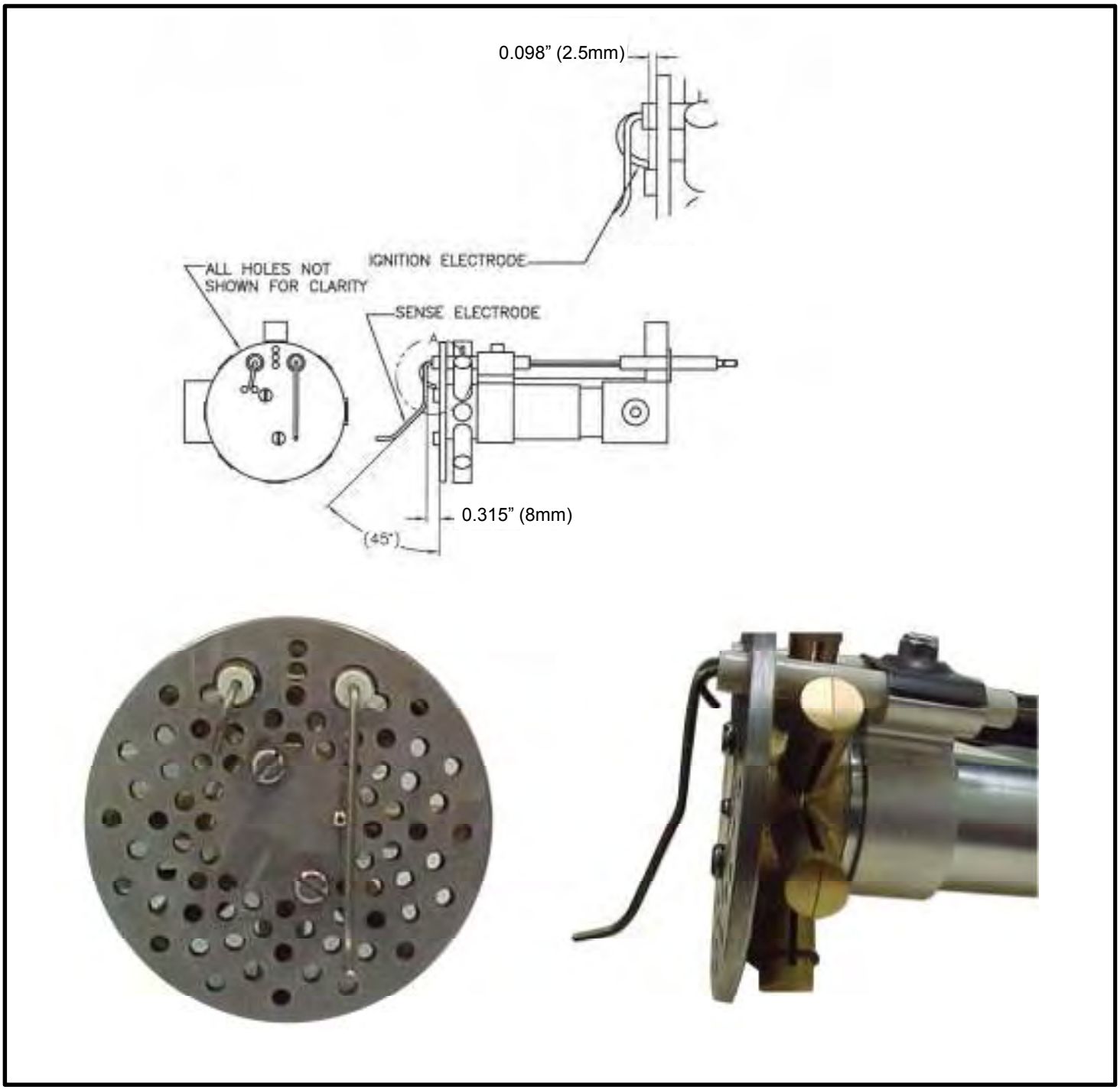

Figure 1

E. ELECTRICAL SUPPLY

The installation must be wired and grounded in accordance with local codes or in their absence, with the National Electric Code ANSI/NFPA No. 70-2002 or latest edition.

In CANADA, all wiring shall be done in accordance with the Canadian Electrical Code.

F. MAIN BURNER INSTALLATION

The LC1500 power gas burners are approved for use with natural and propane gas only.

Air Shutter Setting (set to position 4)
Figure 2

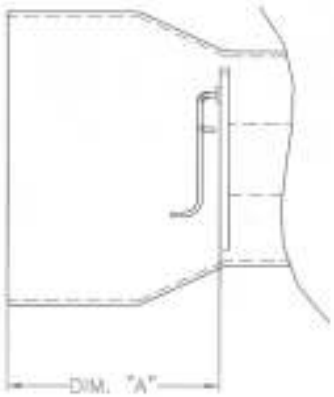

Burner Head Setting, Dimension "A"
Figure 2

LC 1500

With 1 ¼" Gas Line - Natural Gas

(1 ¼" Regulator. 1 ¼" Solenoid valves)
(Maxitrol Regulator RV81 with Green Spring*, ASCO Solenoid valves K3A772T)

Firing Rate (1000's Btu/hr)	Combustion Air Shutter Setting	O_2 (%)	Manifold Pressure **Inch of Water**	Minimum Inlet Pressure **Inch of Water** (Burner Running)	Fan Pressure **Inch of Water**	Dimension "A" Setting
700	4 ½	3-4	1.9	2.8	0.1	3.00"
800	5 ¼	3-4	2.5	3.7	0.12	3.00"
900	5 ½	3-4	3	4.5	0.14	3.00"
1000	6	3-4	3.6	5.5	0.16	3.00"
1100	6	3-4	4.3	6.6	0.16	3.00"
1200	6 ½	3-4	5.1	7.8	0.19	3.00"
1300	7	3-4	6.1	9.2	0.22	3.00"
1400	7 ½	3-4	7	10.1	0.29	3.00"
1500	8	3-4	8.2	12.9	0.36	3.00"

*Note: For firing rates of 1000M Btu/hr and below, use plated (silver) spring part # 63799-002

Figure 2

LC 1500

With 1 ½" Gas Line - Natural Gas

(1 ½" Regulator. 1 ½" Solenoid valves)

(Maxitrol Regulator RV81 With Green Spring*, ASCO Solenoid valves K3A7872T)

Firing Rate (1000's Btu/hr)	Combustion Air Shutter Setting	O_2 (%)	Manifold Pressure **Inch of Water**	Minimum Inlet Pressure **Inch of Water** (Burner Running)	Fan Pressure **Inch of Water**	Dimension "A" Setting
700	4 ½	3-4	1.9	2.4	0.1	3.00"
800	5 ¼	3-4	2.5	3.2	0.12	3.00"
900*	5 ½	3-4	3	4	0.12	3.00"
1000	6	3-4	3.6	4.7	0.15	3.00"
1100	6	3-4	4.3	5.7	0.15	3.00"
1200	6 ½	3-4	5.1	6.9	0.16	3.00"
1300	7	3-4	5.9	8	0.22	3.00"
1400	7 ½	3-4	7.1	9.6	0.24	3.00"
1500	8	3-4	7.9	10.8	0.31	3.00"

*Note: For firing rates of 1000M Btu/hr and below, use plated (silver) spring part # 63799-002

LC 1500

With 1 ¼" Gas Line – L.P. Gas

(1 ¼" Regulator. 1 ¼" Solenoid valves)

(Maxitrol Regulator RV81 With Green Spring*, ASCO Solenoid valves K3A772T)

Firing Rate (1000's Btu/hr)	Combustion Air Shutter Setting	O_2 (%)	Manifold Pressure **Inch of Water**	Minimum Inlet Pressure **Inch of Water** (Burner Running)	Fan Pressure **Inch of Water**	Dimension "A" Setting
700	4 ½	3-4	1	1.4	0.1	3.00"
800	5 ¼	3-4	1.4	1.8	0.12	3.00"
900	5 ½	3-4	1.6	2.2	0.14	3.00"
1000	6	3-4	1.8	2.6	0.16	3.00"
1100	6	3-4	2.1	3	0.16	3.00"
1200	6 ½	3-4	2.7	3.7	0.19	3.00"
1300	7	3-4	3.2	4.5	0.22	3.00"
1400	7 ½	3-4	3.4	4.8	0.29	3.00"
1500	8	3-4	4.2	6	0.36	3.00"

*Note: For firing rates of 1000M Btu/hr and below, use plated (silver) spring part # 63799-002

Figure 2 (Continued)

LC 1500
With 1 ½" Gas Line - L.P. Gas
(1 ½" Regulator. 1 ½" Solenoid valves)
(Maxitrol Regulator RV81 With Green Spring, ASCO Solenoid valves K3A7872T)

Firing Rate (1000's Btu/hr)	Combustion Air Shutter Setting	O_2 (%)	Manifold Pressure **Inch of Water**	Minimum Inlet Pressure **Inch of Water** (Burner Running)	Fan Pressure **Inch of Water**	Dimension "A" Setting
700	4 ½	3-4	1	1.2	0.1	3.00"
800	5 ¼	3-4	1.3	1.5	0.12	3.00"
900	5 ½	3-4	1.5	2	0.12	3.00"
1000	6	3-4	2	2.5	0.15	3.00"
1100	6	3-4	2.2	2.8	0.15	3.00"
1200	6 ½	3-4	2.5	3.1	0.16	3.00"
1300	7	3-4	3.1	3.8	0.22	3.00"
1400	7 ½	3-4	3.6	4.5	0.24	3.00"
1500	8	3-4	4.2	5.2	0.31	3.00"

*Note: For firing rates of 1000M Btu/hr and below, use plated (silver) spring part # 63799-002

Figure 2 (Continued)

Notes on Tables:

- Combustion Air Shutter Setting is the position of the Air Shutter
- O_2% is the percentage of oxygen measured in the flue products.
- Manifold Pressure is the gas pressure measured at the pressure tap on the burner manifold pipe.
- Minimum Inlet Pressure is the minimum gas supply pressure to the gas train necessary to obtain the desired flow rate. Inlet supply pressures up to 28 in w.c. are permitted.
- Fan Pressure is the combustion air pressure as measured at the fan pressure tap.

Burner Setup:
From the table in Figure 2, find the Burner Head Setting for the desired flow rate the burner will be operating at. Adjust the burner head by loosening the allen screw that secures the burner head adjustment knob. Measuring from the end of the air tube to the front of the burner head, turn the burner head adjustment knob until the burner head is in the desired location. Tighten the allen screw to secure the adjustment knob.

Make an initial air shutter adjustment by loosening the allen screw in the center of the air shutter adjustment knob. Locate the desired air shutter setting from the table in Figure 2. Adjust the shutter to the proper setting and re-tighten the allen screw.

Utilizing the integral mounting flange, fasten the burner to the heating appliance. For proper air tube insertion, refer to Section I.C, MOUNTING TO EQUIPMENT.

Gas Pipetrain: The pipetrain is UL795 compliant, which includes High & Low Gas Pressure Safety Switches, two manual ball valves, two 120 VAC Solenoid Shut-off Valves, a Main Gas Pressure Regulator, and gas test ports. Upon request the pipetrain can be supplied without a Gas Pressure Regulator, but the correct Gas Pressure Regulator must be installed before operation. The pipetrain components may be shipped separate, and minor field plumbing and wiring are required. The pipetrain must be located 20" (50.8m) or less from the burner for optimal performance. Additional pipetrains that comply with CSD-1, NFPA, FM or GAP (formerly IRI) are available. Upon request, the pipetrain can be pre-assembled and pre-wired.

Gas Train Connection:
In most cases, the burner is supplied with a pre-assembled gas train. If this is the case, attach the gas train to the gas inlet connection of the burner making sure the gas train is orientated properly. The solenoid shut off valves and pressure regulator have arrows on the housings that indicate the direction of gas flow. When making connections that utilize NPT threads, use pipe joint compound that is resistant to the effects of liquefied petroleum gases. Turn the manual valves on the gas train to the off position. Using new black iron pipe and malleable fittings, connect the gas supply piping to the inlet of the gas train. Refer to Section I.D, GAS SUPPLY PIPING.

If the gas train is not pre-assembled, use new black iron pipe, malleable fittings, and suitable pipe joint compound to assemble the gas train. An example of an assembled gas train is shown in Figure 29. The manual valves, solenoid valves, pressure switches and pressure regulator must be connected as described in the installation instructions for the given component, and in the flow sequence as shown in Figure 29. The solenoid shut off valves and pressure regulator have arrows on the housings that indicate the direction of gas flow. When assembling these components into the gas train, make sure the arrows point in the direction of gas flow. Following the assembly of the gas train, attach it to the burner and gas supply piping as described above.

Note: The gas train, and all its safety components, should be leak tested after installation. 1/8″ NPT fittings have been provided to isolate and test the solenoid valves. The train, and all safety components, should be tested for leaks and functionality at regular intervals.

Note: Gas trains are heavy causing stress to the gas connections on the burner. **The gas train must be properly supported to minimize the potential for stress on the burner's gas piping connections.**

Electrical Connections:
The installation must be wired and GROUNDED in accordance with local codes or in their absence, with the National Electric Code ANSI/NFPA No. 70-2002 or latest edition.

In CANADA, all wiring shall be done in accordance with the Canadian Electrical Code.

There are two sets of wires extending out of the control panel. The black and white wires marked "L1" and "L2" should be connected to the 120 VAC supply line. The black and white wires marked "GV1" and "GV2" are to be connected to the gas train. The green wire exiting the gas train must be connected to the ground lug in the control panel.

For the 120 VAC wiring to the burner, use solid copper conductor wire not lighter than #14 AWG. If a fused disconnect is used, it should be fused for a minimum of 15 amps.

For the 120 VAC wiring from the burner to the gas train, use solid copper conductor wire not lighter than #14 AWG.

The burner is designed to allow for connection of a 24 VAC interlock. Burners utilizing the Honeywell S89F control are shipped with a short orange "jumper" wire connecting the terminals designated for the interlock. When connecting an interlock, remove the orange "jumper" wire and utilize the terminal connections originally occupied by this wire. Refer to the wiring diagram in figure 7 for location of the orange "jumper" wire.

CAUTION: The burner is equipped with it's own 24 VAC transformer. Do not add any 24 VAC power consuming device in the 24 VAC control circuit of the burner, as it could overload the transformer.

CAUTION: Label all wires prior to disconnection when servicing controls. Wiring errors can cause improper and dangerous operation. Verify proper operation after servicing.

NOTE: If any of the original burner wiring must be replaced, it must be replaced with #18 AWG 105 degrees C wire or equivalent. See Section 3- Operation and Troubleshooting for applicable burner wiring diagrams.

G. 120VAC SOLENOID SHUT-OFF GAS VALVES

The gas solenoid shut-off valves may be pre-plumbed onto the pipetrain. The pipetrain may also be pre-wired for convenience, but the electrical wiring from the burner must be connected in the field.

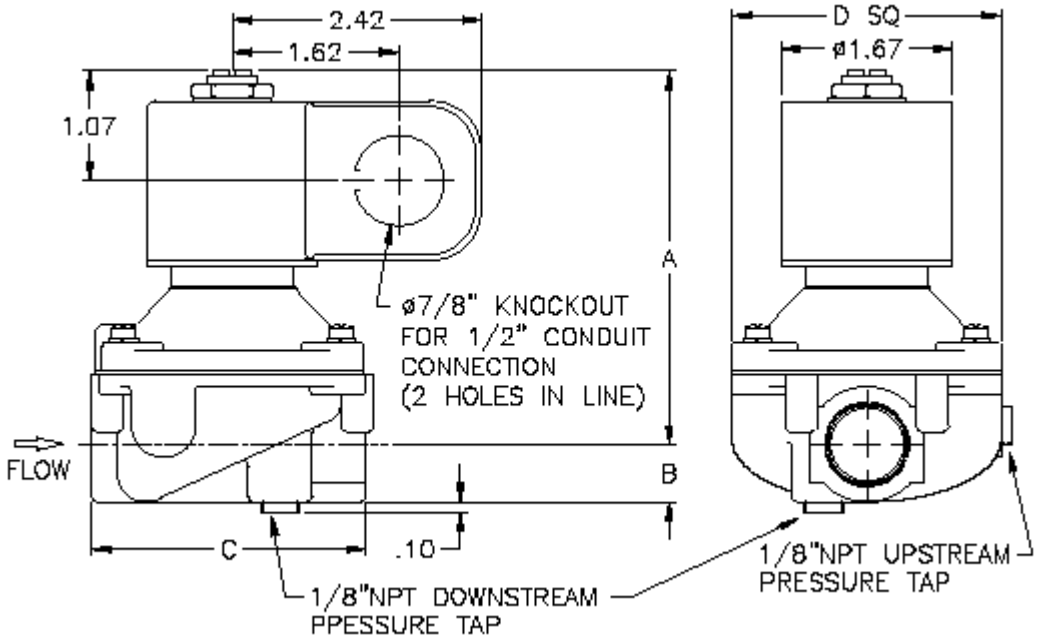

Figure 3

Figure 4

Figures 3 and 4 show one type of solenoid valve that is used in the gas trains. When installing solenoid valves into a gas train, the valves must be connected in the proper orientation. The arrow on the valve body depicts the direction of gas flow. Do not install the valves in a backward orientation.

Refer to the wiring diagram in Figure 28 of this manual for proper wiring of solenoid valves.

H. PRESSURE REGULATOR ADJUSTMENT

The gas pressure regulator is NOT factory preset, and must be field-adjusted while the burner is in operation. Refer to Figure 2 for pressure requirements.

When adjusting the regulator outlet pressure to set input capacity per the tables in Figure 2, remove the regulator cap for access to the slotted adjustment screw. Turning the screw counter clockwise reduces manifold pressure, clockwise increases the pressure.

NOTE: MANIFOLD PRESSURE ADJUSTMENTS CAN ONLY BE MADE WITH THE BURNER RUNNING AND THE GAS ON.

The 1/8″ NPT pressure tap for manifold pressure measurement is located on the side of the burner's manifold pipe. Use a "u"-tube manometer or dial type pressure gauge, scaled from 0″w.c. to 15.0″ w.c. (3736.5Pa) to read pressure.

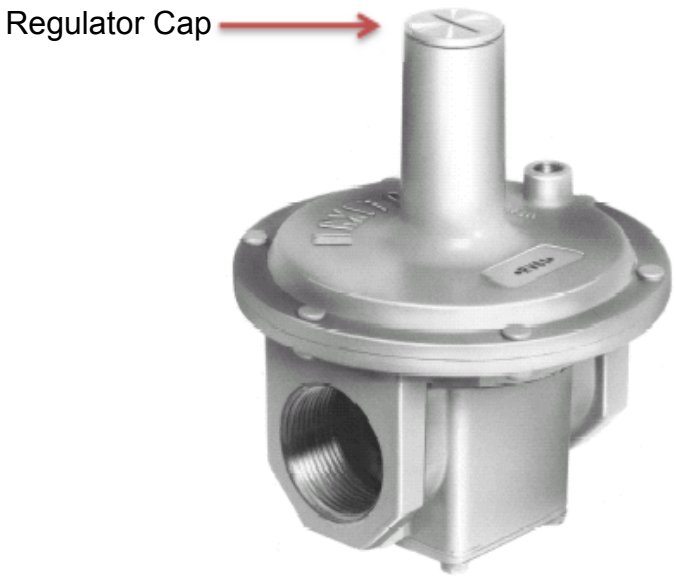

Figure 5

I. GAS PRESSURE SWITCHES

MOUNTING
All switches can be mounted in either horizontal or vertical position. Switches should be reasonably level but do not require accurate leveling.
Switches have been factory calibrated and tested for leaks. However, it is recommended that the switch body, gas pipe inlets and connections be soap bubble tested for leaks after installation.

OPERATION
Low Gas Pressure Models
Low gas pressure switches break the electrical circuit on pressure drop at the point when gas pressure becomes lower than the indicated set pressure.
Before the manual reset button can be properly latched, gas pressure in the chamber must be higher than the indicated setting.

High Gas Pressure Models
High gas pressure switches break the electrical circuit when pressure rises above the indicated preset pressure.

Range Adjustment - All Models
To adjust gas pressure cut-off setting, remove the cover. Turn the range scale adjustable knob to increase pressure setting or decrease pressure setting. Install cover and tighten the cover screws to prevent tampering. Proper adjustment of the high and low gas pressure switches is explained in section II.

SECTION II
INITIAL START UP

1. **NOTE:** *Read the applicable sequence of burner/primary gas control operation, gas pressure switches, etc. in Section III Operation and Troubleshooting before proceeding.*

2. Lay out combustion test equipment, manometers, stopwatch, DC micro-amp meter, and other miscellaneous tools as needed.

3. Based on gas type and train pipe size, locate the applicable table in Figure 2. Adjust the primary air shutter setting per the dimensions shown in the table.

4. **NOTE:** *Initial activation of the burner should begin with checking the function of the automatic controls by means of a "dry run" before gas is supplied to the main burner nozzle – through a complete main burner firing cycle and a complete check of all automatic safety controls with the test firing valve in the closed position then through an activated firing cycle.*

5. Temporarily remove the covers from the High and Low Gas Pressure Switches and set the switches using the dials. The High Gas Pressure Switch should be set at the highest inches w.c. setting, as an initial starting point. The Low Gas Pressure Switch should be set at the lowest inches w.c. setting, as a starting point. Push the manual reset buttons on the Gas Pressure Switches.

   Note: These settings must be re-adjusted after the burner is ignited.

6. Open the ball valve to the inlet of the gas pipetrain. Make sure the ball valve nearest the burner (the outlet of the gas pipetrain) remains closed. Test all new piping for leaks with a soapy solution, or leak detector. Do not use an open flame to test for gas leaks.

7. Turn on the main electrical power and set the thermostat or operation control to call for heat. Turn the burner ON/OFF switch to the "ON" position. Allow the combustion fan to run a MINIMUM of 5 minutes to purge the combustion chamber and appliance heat exchanger. The amber indicator light shows that the burner is powered and the switch is in the on position.

8. Turn the burner ON/OFF switch to the "OFF" position or set the thermostat or operating control below room temperature, shutting the burner "OFF" at least 1 minute to RESET the primary control. If the burner is equipped with a momentary reset switch, push and hold switch for three seconds with power applied to the burner.

9. Attach a manometer to the pressure tap on the gas manifold. Attach a slant tube manometer to the pressure tap on the blower housing. Refer to Figures 19 and 24 for locations of these pressure taps.

10. Open the ball valve on the outlet of the pipetrain (nearest the burner).

11. Power the burner, turn the burner ON/OFF switch to the "ON" position and set the thermostat or operating control to call for heat. The burner will start and go through the applicable sequence of burner/primary gas control operation, refer to section III. After the purge has been completed, the green indicator light will show that the solenoid shut-off valves are powered.

    Note: On new gas line installations, air may be trapped in the gas line; the burner may experience several lockouts until all the air is purged from the lines.

12. Once the burner is running, adjust the gas and air pressure based on the values shown in the appropriate table in Figure 2. When making adjustments to the gas pressure regulator, refer to Section I.H – Pressure Regulator Adjustment.

    Note: Adjusting the air shutter may affect the gas pressure. Readjust the gas pressure if necessary.

13. A more accurate Btu/hr (kW) input can be determined by using the gas service meter with the burner operating (all other gas appliances should be off). The hand on the gas meter dial with the lowest cubic feet value (fastest revolving dial), should be clocked (timed) for one complete revolution. Use the following formula:

$$\frac{\text{3600 x cubic ft. per revolution x Btu value/cubic ft}}{\text{seconds per revolution}} = \text{Btu/hr}$$

NATURAL GAS EXAMPLE: Timing one revolution of the $1ft^3$ dial at 6 seconds on natural gas (roughly 1000 Btu/ft^3 heating value):

$$\frac{3600 \times 1 \times 1000}{6} = 600{,}000 \text{ Btu/hr}$$

PROPANE GAS EXAMPLE: Timing one revolution of the $1ft^3$ dial at 15 seconds on propane gas (roughly 2515 Btu/ft^3 heating value):

$$\frac{3600 \times 1 \times 2515}{15} = 603{,}600 \text{ Btu/hr}$$

14. After the desired input has been obtained, re-adjust the primary air damper open or closed to visually obtain a blue flame with well-defined orange or yellow tips for natural gas, or well defined yellow tips for propane gas. Adjustment of the air damper may change the gas pressure and thus the gas flow rate. If the gas pressure changes during air shutter adjustment, reset the gas pressure.

15. After the burner has been in operation for at least 10 minutes, assuring combustion chamber and heat exchanger are fully warmed, take combustion analysis flue gas samples just ahead of the draft control in the flue pipe. **A combustion gas analyzer must be used to fine-tune the burner.**

NOTE: ALWAYS USE RELIABLE COMBUSTION TEST INSTRUMENTS. BEING PROFICIENT IN THE USE OF THESE INSTRUMENTS AND INTERPRETING THEIR DATA IS NECESSARY FOR SAFE, RELIABLE AND EFFICIENT BURNER OPERATION.

16. Perform the following combustion analysis. All adjustments below must be made with the following instruments: draft gauge, O_2 or CO_2 analyzer and CO tester.

A. Adjust the primary air damper to provide about 25% excess combustion air. Confirm this by checking the flue gas for its FREE OXYGEN (O_2) or CARBON DIOXIDE (CO_2) PERCENTAGES with a test instrument. Free oxygen should be about 4.5%, or carbon dioxide should be about 9.5% for natural gas, 12.1% for propane gas.
B. CARBON MONOXIDE (CO)– Should be checked for its presence in the flue gas. This percentage should not exceed .04% (or 400 PPM air free).

If an O_2 analyzer is used:

$$CO_{airfree} = \frac{20.9}{(20.9 - \%O_2)} \times CO_{ppm}$$

If a CO_2 analyzer is used:

For Natural Gas: $$COairfree = \frac{11.7}{\%CO_2} \times COppm$$

For Propane Gas: $$COairfree = \frac{13.8}{\%CO_2} \times COppm$$

C. NOTE: The LC1500 was designed to fire into positive (up to 2.0 inches w.c.), neutral, or slightly negative (up to –0.2 inches w.c.) combustion chambers. For optimal performance, check overfire draft and adjust to NEGATIVE -.01 (2.491Pa) to -.02 (4.982Pa) inches w/c during burner operation if possible.

D. The flue gas temperature should be between 325°F (163 °C) and 550°F (288 °C) for gas burners. Higher flue gas temperatures indicate over-firing or excessive draft through the appliance. Lower flue gas temperatures may cause excessive condensation and indicate under-firing. Consult your local utility or the appliance manufacturer for acceptable flue gas temperatures.

CAUTION: IF THE BURNER Btu/hr (kW/hr) INPUT IS CHANGED, REPEAT STEPS 13 thru 16.

17. Adjust the High & Low Gas Pressure Switches according to actual firing conditions. For close burner control, the High Gas Pressure Switch should be set at approximately 1 in. w.c. above the manifold pressure and the Low Gas Pressure Switch should be set at approximately 2 in. w.c. below the manifold pressure. Nuisance lockouts will occur if the switch settings are too close to the gas manifold setting, and fluctuations in gas pressures occur. Re-attach switch covers.

18. Record the installation data, the combustion readings, etc., and affix to this manual, or the burner and/or appliance. Space has been provided at the back of this manual for start-up notes, dealer's name, address, telephone number, as well as the date of installation.

SUGGESTION: All new installations should be re-inspected for proper combustion and burner operation after one or two weeks of normal operation.
For subsequent normal starting and shut off procedure, refer to the "Consumer Instructions" in the back of this manual or the instruction plate attached to the burner.

TO RESTART THE BURNER AFTER A FLAME FAILURE, turn the on/off switch to "OFF" for 1 minute to reset the primary controller. Turn the on/off switch to "ON" and push the reset switch on either the panel or the flame safeguard on models equipped with reset buttons. Push the manual reset on the Low Gas pressure switch. The burner should relight after power is restored and the unit has a call for heat. If problems persist, refer to the troubleshooting section of this manual.

To stop the burner in the event of an emergency, remove power from the main electrical disconnect, shut off any manual gas ball valve, or turn the burner ON/OFF switch to the "OFF" position.

SECTION III
OPERATION AND TROUBLESHOOTING

SEQUENCE OF OPERATION – LC1500 POWER GAS BURNER UTILIZING HONEYWELL S89F GAS PRIMARY WITH BUILT IN 30 SECOND PREPURGE.

On a call for heat, voltage (24VAC) is applied to the motor start relay and air switch. Once the fan motor reaches operating rpm, the available combustion air will close the air-proving switch contacts, energizing the gas primary control.

The gas primary controls have an internal 30-second pre-purge timer. After the initial 30 second pre-purge, an internal 8-second safe start check will commence. Once this is successfully completed, the gas primary control simultaneously energizes the gas valves and ignition transformer. Gas flows to the burner and the transformer produces an approximate 6,000 volt spark, end point grounded at the burner head, establishing main burner flame.

At the start of each heat cycle, there is a trial for ignition period of four (4) seconds duration. Normally, burner flame will be established before the end of this period. Once the flame is established, sparking will cease and the flame rod will provide flame monitoring to the gas control primary for the remainder of the heat cycle. If the flame should be extinguished during the heat cycle, the gas control primary will go into the 30 second pre-purge and 8 second safe start check, then re-energize the gas valve and ignition transformer in an attempt to establish the main burner flame. If the flame is not established the 4-second trial for ignition period, the gas primary control will go into lockout de-energizing the gas valves and ignition transformer.

To restart the system, the main power or thermostat must be de-energized momentarily, and then re-energized. If at any time during the heat cycle, there is an insufficient supply of combustion air to the burner, the air switch will open, putting the system into lockout by closing the gas valves.

SEQUENCE OF OPERATION – LC1500 POWER GAS BURNER UTILIZING HONEYWELL RM7895 OR RM7897 FLAME SAFEGUARD.

The RM7800 series flame safeguard is designed to control the ignition sequence of the burner, and to monitor proper burner performance during the heating cycle. On a call for heat, the RM7800 series will energize the combustion motor and monitor the air switch to prove combustion air. After a pre-purge cycle, normally 30 seconds, the gas valves will be energized along with the ignition transformer. A 4 second trial for ignition will take place. When flame is established, the RM7800 series flame safeguard will monitor the flame.

In the event the RM7800 goes into a lock-out condition, a manual reset is required to restart the burner. This is done by pushing the manual reset button.

NOTE: On some models of the RM7897 Flame Safeguard, there is a run/test switch located on top of the control (see figure 10). This switch must be in the RUN position for the burner to fire.

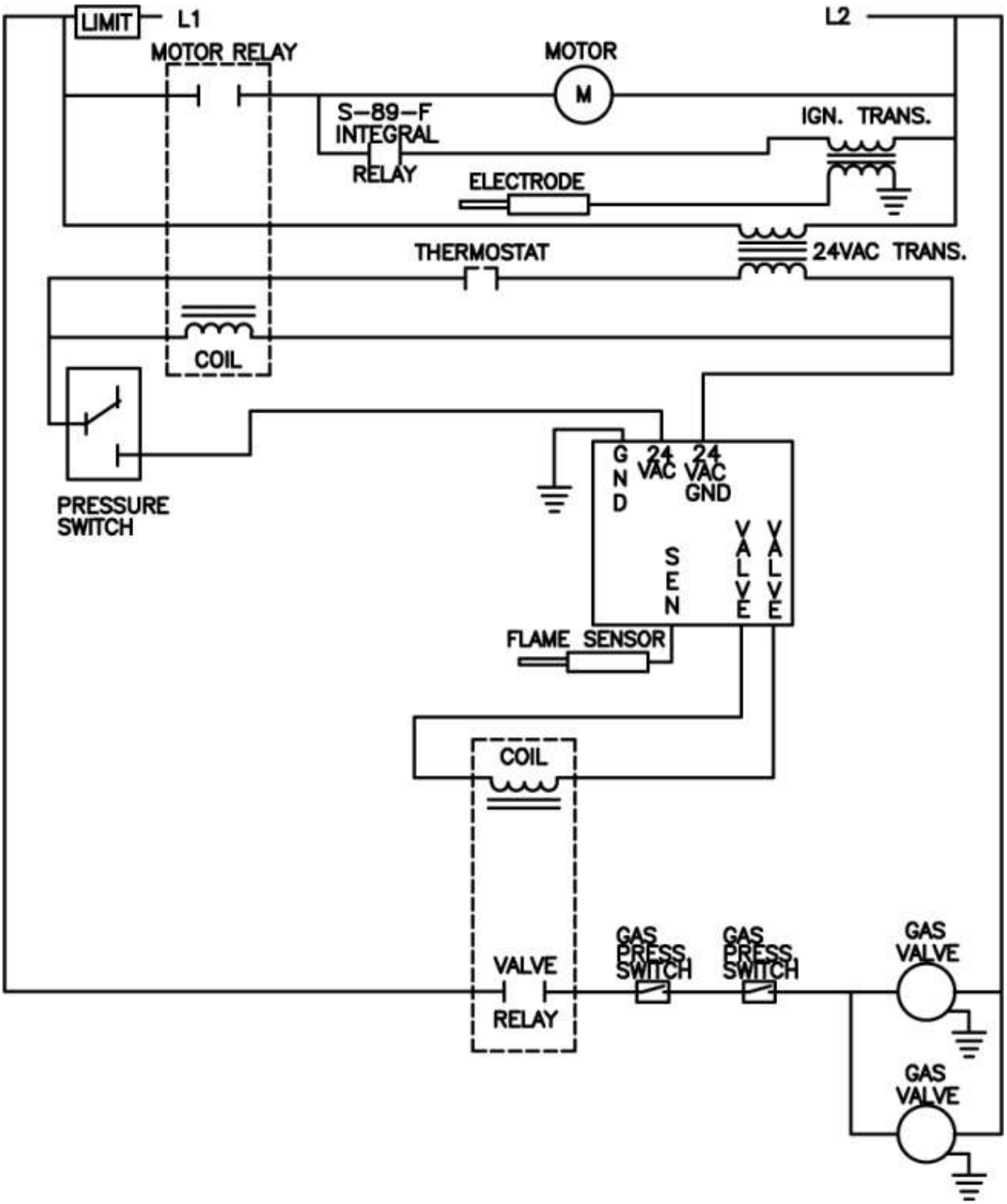

LC LADDER WIRING DIAGRAM
Figure 6

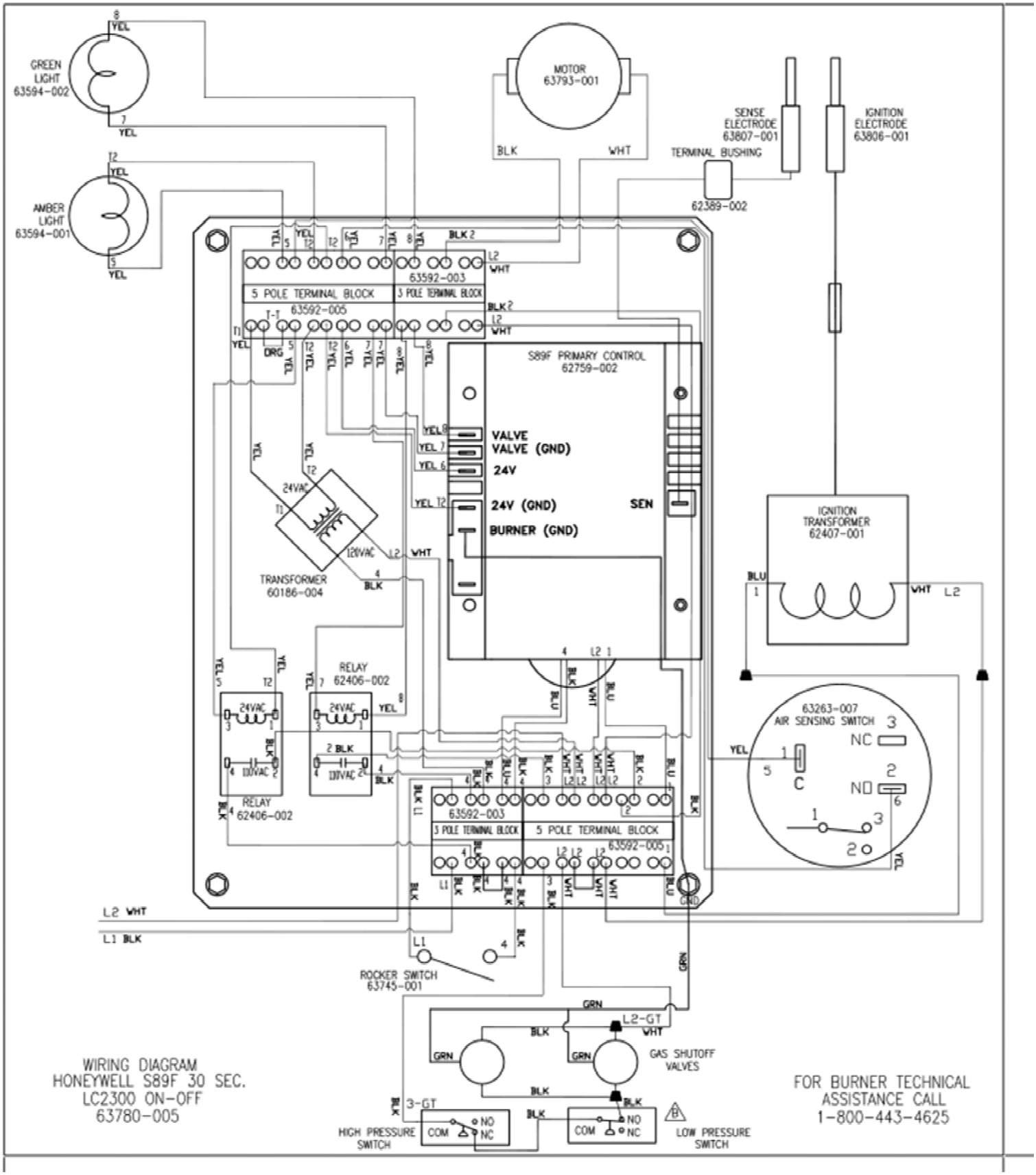

HONEYWELL S89F 30 SECOND PREPURGE ON/OFF
Figure 7

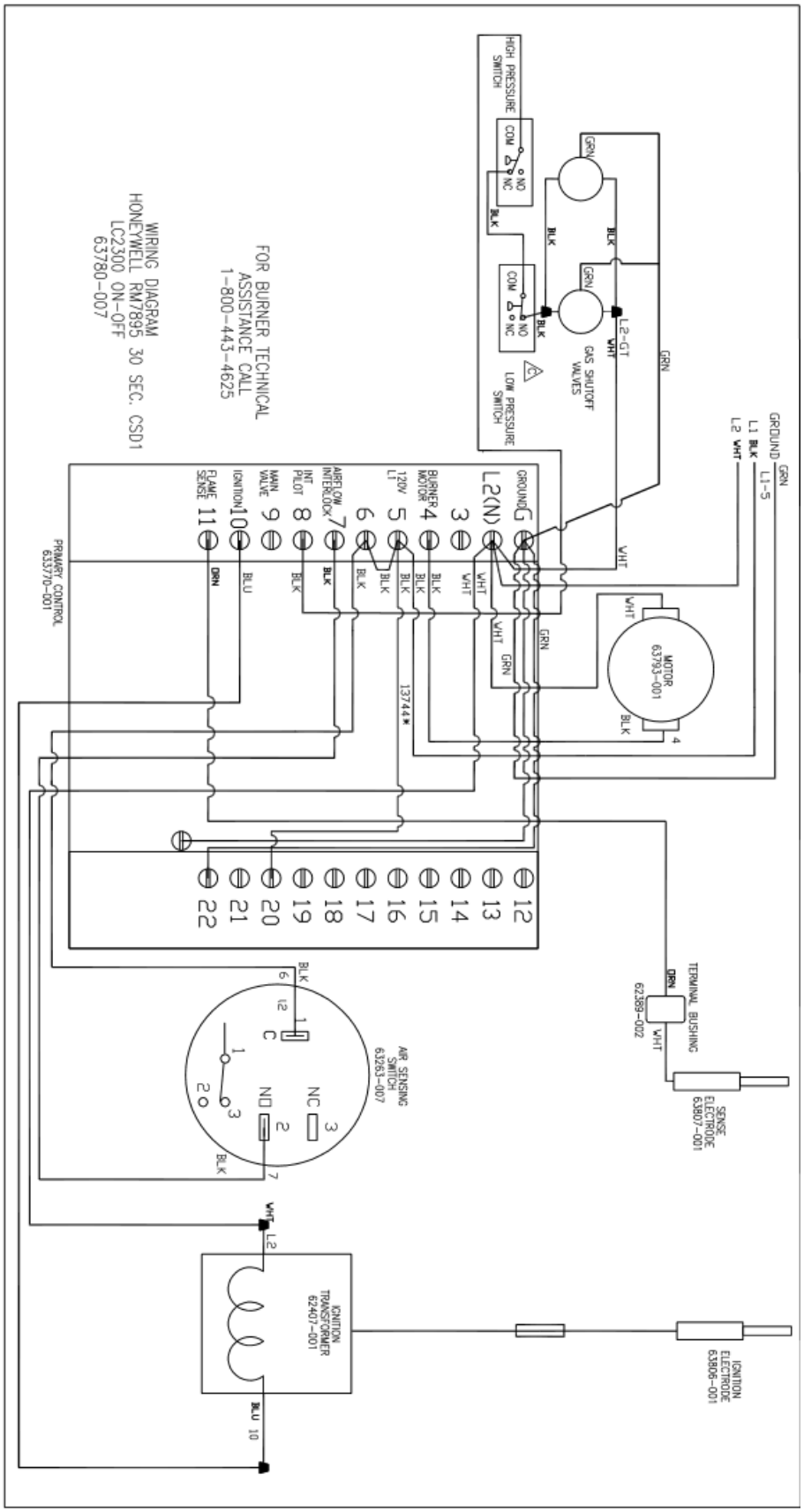

HONEYWELL RM7895 AND RM7897 ON/OFF CSD1 COMPLIANT
Figure 8

FLAME SENSING WHEN EQUIPPED CONTROLS UTILIZING FLAME ROD SENSING

The Honeywell primary ignition controls equipped with flame rod sensing utilize the flame current rectification principal for main burner flame sensing.

The flame rectification phenomenon occurs as follows: The ignited gas flame causes the immediate atmosphere around the flame to become ionized (gas atoms become electrically charged). The ionization causes the atmosphere around the flame to become electrically conductive. An AC voltage output from the control sensing circuit is routed through the flame sensor probe. When the sensor probe and the burner head are both in contact with a properly adjusted flame, the burner head with its larger surface attracts more free electrons, thus becoming negatively charged. The sensor probe with its small surface area gives up free electrons, thus becoming positively charged. The free electrons from the AC voltage in the sensor probe flow through the ionized gas flame to the grounded burner head. As the AC current passes through the gas flame, it is rectified into a DC current flowing back to the grounded side of the sensing circuit. The flame actually is a switch. When the flame is present, the switch is closed allowing current to flow through the sensing circuit of the control. When no flame is present, the switch is open with no current flowing through the sensing circuit of the control.

The DC current flow is measured in units called DC microamperes. A steady DC microampere current of 0.8 minimum (and steady) or higher through the sensing circuit of the primary ignition control is sufficient to keep the burner running without a safety lockout. See Figure 1 for sensor probe and electrode dimensional settings, Figures 9 for flame current measurement.

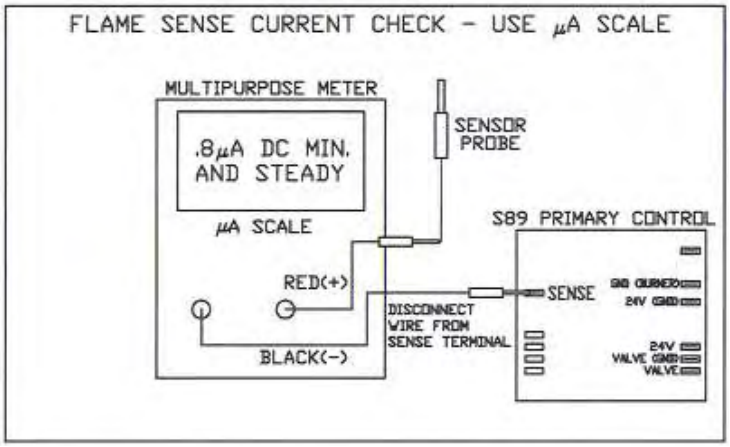

Honeywell S89F Flame Signal Measurement

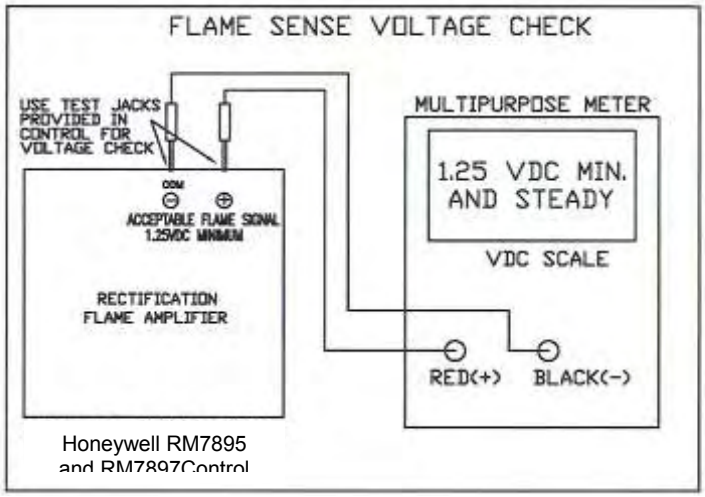

Honeywell RM7895 and RM7897 Flame Signal Measurement

Figure 9

FLAME SENSING USING A UV SCANNER

An ultra-violet (UV) scanner is sometimes used with a flame safeguard. The UV scanner senses the presence of flame by viewing the ultra-violet light emitted by the flame. A flame safeguard conducts a check of the UV scanner during each ignition sequence. Prior to opening the gas valves, the flame safeguard will verify a “no flame” signal from the scanner.

LC SERIES WITH A HONEYWELL S89F PRIMARY IGNITION CONTROL
TROUBLESHOOTING GUIDE

MOTOR DOES NOT START

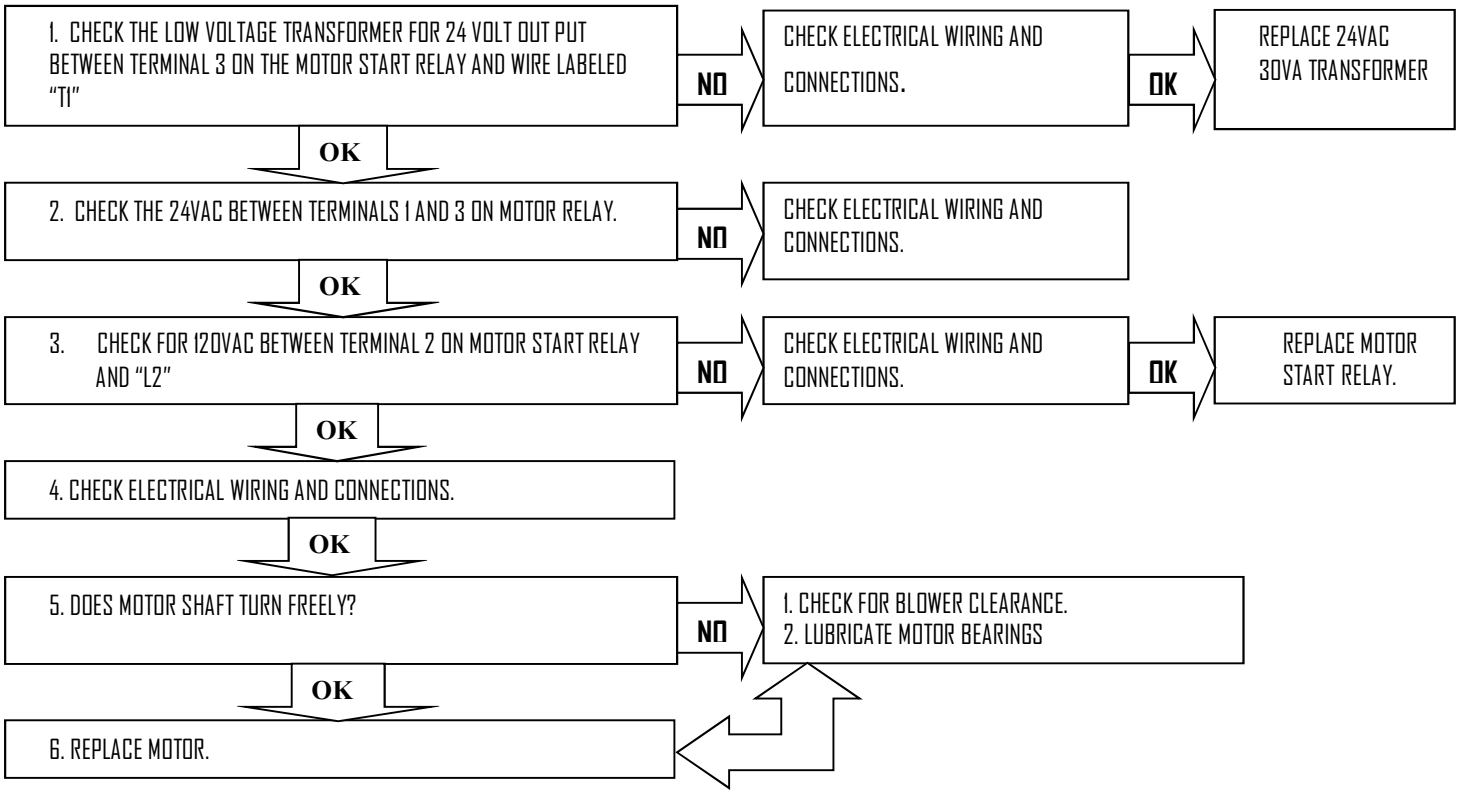

IGNITION ARC ESTABLISHED – NO FLAME

1. RESET CONTROL-MOTOR STARTS-COMPLETES 30 SECOND PREPURGE CYCLE, 8 SECOND SAFE START CHECK AND TRIAL FOR IGNITION, 4 SECONDS HONEYWELL SERIES.
   NOTE:THE BURNER MOTOR WILL CONTINUE TO OPERATE DURING THE LOCK OUT MODE WHEN THE THERMOSTAT CIRCUIT IS CALLING FOR BURNER OPERATION.

OK

2. CHECK FOR CORRECT GAS PRESSURE AT MANIFOLD. IF NECESSARY, ADJUST PER TABLE 2. IF NO GAS PRESSURE CONTINUE BELOW.

OK → ADJUST AIR SHUTTER PER TABLE 2. AFTER THE BURNER FIRES, SET UP THE BURNER PER SECTION II.

IN ORDER FOR THE FOLLOWING FUNCTIONAL TEST TO BE MADE, THE CONTROL MUST BE RESET AND THE TESTS MONITORED DURING THE 4 SECOND HONEYWELL SERIES TRIAL FOR IGNITION PERIOD THAT OCCURS AT THE END OF THE 30 SECOND PREPURGE AND 8 SECOND SAFE START CHECK CYCLE.

OK

3. CHECK FOR 120 VOLTS ACROSS WIRES FEEDING GAS TRAIN. NOTE: VOLTAGE WILL ONLY BE PRESENT DURING IGNITION TRIAL. IF NO VOLTAGE CONTINUE BELOW.

OK → IF VOLTAGE IS PRESENT, PROCEED TO GAS TRAIN TROUBLESHOOTING.

4. CHECK FOR 24VAC AT GAS VALVE TERMINALS 1 AND 3. NOTE: VOLTAGE WILL ONLY BE PRESENT DURING IGNITION TRIAL.

NO → CHECK ELECTRICAL WIRING AND CONNECTIONS. BE SURE LEADS ARE ON CORRECT GAS VALVE TERMINALS.

OK → REPLACE PRIMARY IGNITION CONTROL.

OK

5. CHECK FOR 120 VOLTS BETWEEN TERMINAL 2 ON GAS VALVE RELAY AND L2.

NO → CHECK ELECTRICAL WIRING AND CONNECTIONS BETWEEN TERMINAL 2 ON GAS VALVE RELAY AND L1.

OK

6. CHECK FOR 120 VOLTS BETWEEN TERMINAL 4 ON GAS VALVE RELAY AND L2. VOLTAGE IS ONLY PRESENT DURING TRIAL FOR IGNITION.

NO → REPLACE GAS VALVE RELAY.

AT THIS POINT, RECHECK VOLTAGE ACROSS WIRES FEEDING GAS TRAIN. VOLTAGE SHOULD BE PRESENT DURING IGNITION TRIAL.

GAS TRAIN TROUBLESHOOTING

CHECK TO MAKE SURE 120 VOTLS IS PRESENT ACROSS THE WIRES FEEDING THE GAS TRAIN DURING IGNITION TRIALS. IF NOT, RETURN TO STEP 4 UDNER "IGNITON ARC ESTABLISHED - NO FLAME".

OK

1. ADJUST HIGH AND LOW GAS PRESSURE SWITCHES AS OUTLINED IN SECTION 11.5 IF THERE IS NO GAS FLOW CONTINUE BELOW.

→ IF BURNER FIRES, ADJUST HIGH AND LOW GAS PRESSURE SWITCHES AS OUTLINED IN SECTION 11.17

2. CHECK TO INSURE THERE IS ADEQUATE GAS PRESSURE AND CAPACITY. INSTALL A PRESSURE GAGE AT THE INLET PRESSURE TAP. WHEN THE BURNER IS OFF, THE GAS PRESSURE SHOULD BE BETWEEN 3" AND 14" W.C.

→ IF NO GAS PRESSURE IS PRESENT CORRECT THE PROBLEM WITH THE GAS SUPPLY.

OK

3. CHECK THE WIRING AT EACH GAS PRESSURE SWITCH AND EACH GAS VALVE TO INSURE PROPER CONNECTIONS AND PROPPER WIRE ROUTING. REFER TO FGIURE 32.

→ CORRECT WIRING IF INCORRECT.

OK

4. CHECK THE OPERATION OF THE GAS PRESSURE SWITCHES. DURING A 4 SECOND IGNITION TRIAL, MEASURE THE VOLTAGE BETWEEN THE VC CONNECTION ON THE HIGH PRESSURE SWITCH AND L2. THEN MEASURE THE VOLTAGE BETWEEN THE N.O. CONNECTION ON THE LOW PRESSURE SWITCH AND L2. BOTH SHOULD READ 120 VOLTS.

→ IF NO VOLTAGE IS PRESENT, CHECK THE PRESSURE ADJUSTMENT ON THE SWITCH WITH NO VOLTAGE. IF PROPERLY ADJUSTED REPLACE SWITCH.

OK

5. AT THIS POINT, ONE OF THE GAS VALVES MUST NOT BE OPENING. CHECK THE RESISTANCE OF EACH SOLENOID COIL AND REPLACE IF THE COIL IS ELECTRICALLY OPEN.

→ OPEN COIL → REPLACE VALVE.

OK

6. UTILIZE THE PRESSURE TAPS TO MEASURE THE GAS PRESSURE AFTER EACH VALVE TO DETERMINE WHICH VALVE IS NOT OPENING.

→ REPLACE GAS VALVE.

NO IGNITION ARC ESTABLISHED

1. RESET CONTROL: -MOTOR STARTS – COMPLETES 30 SECOND PREPURGE CYCLE, 8 SECOND SAFE START CHECK SERIES.
-GAS VALVE OPENS, REGULATING ADEQUATE GAS PRESSURE.
-NO FLAME ESTABLISHED – PRIMARY CONTROL LOCKS OUT AFTER 4 SECOND HONEYWELL SERIES TRIAL FOR IGNIITION PERIODS.

IN ORDER FOR THE FOLLOWING FUNCTIONAL TEST TO BE MADE, THE CONTROL MUST BE RESET AND THE TESTS MONITORED DURING THE 4 SECOND HONEYWELL SERIES TRIAL FOR IGNITION THAT OCCURS AT THE END OF THE 30 SECOND PREPURGE CYCLE, AND THE 8 SECOND SAFE START CHECK.

2. CHECK FOR 120VAC BETWEEN TWO LEADS OF IGNITION TRANSFORMER.

NO

CHECK ELECTRICAL WIRING AND CONNECTIONS PER WIRING DIAGRAM FIG. 32.

OK

3. CHECK ELECTRICAL WIRING AND CONNECTIONS PER FIG. 32.

OK

4. CHECK HIGH VOLTAGE LEAD AND CONNECTION TO IGNITION ELECTRODE ROD.

OK

5. INSPECT IGNITION ELECTRODE FOR CRACKED INSULATOR AND CORRECT GAP FIG 1.

OK

6. REPLACE IGNITION TRANSFORMER

OK

CHECK THE FLAME SENSING CIRCUIT FOR:

1. GROUNDED FLAMEROD
2. DAMAGE TO FLAMEROD LEAD INSULATION

NOTE:MAKE SURE THE FLAMEROD CIRCUIT AND/OR PRIMARY CONTROL IS MOISTURE FREE.

OK

REPLACE PRIMARY IGNITION CONTROL.

NO IGNITION - NO GAS VALVE

1. RESET CONTROL – MOTOR STARTS – AFTER 30 SECOND PREPURGE CYCLE AND 8 SECOND SAFE START CHECK. MOTOR CONTINUES TO RUN BUT FLAME IS NOT ESTABLISHED

IN ORDER FOR THE FOLLOWING FUNCTIONAL TEST TO BE MADE, THE CONTROL MUST BE RESET AND THE TESTS MONITORED DURING THE 4 SECOND HONEYWELL SERIES TRIAL FOR IGNITION THAT OCCURS AT THE END OF THE 30 SECOND PREPURGE CYCLE, AND THE 8 SECOND SAFE START CHECK.

2. CHECK FOR 24VAC AT THE 24V PRIMARY CONTROL INPUT TERMINALS LABELED YELLOW AND BROWN.

NO

CHECK THE LOW VOLTAGE TRANSOFRMER FOR 24 VOLT OUTPUT. IF NO VOLTAGE, REPLACE TRANSFORMER. CHECK WIRING CONNECTS BETWEEN TRANSFORMER AND IGNITION CONTROL.

OK

3. CHECK AIR PROVING SWITCH FOR:
   - A. ANY IMPAIRMENT THAT WOULD KEEP IT FROM CLOSING OR OPENING.
   - B. ELECTRICAL CONTINUITY;SWITCH IS NORMALLY OPEN.
   - C. REPLACE SWITCH AS NECESSARY.

LOSES FLAME DURING CYCLE – CONTROL LOCKS OUT ON SAFETY

1. RESET CONTROL: -COMPLETES 30 SECOND PREPURGE CYCLE, AND 8 SECOND SAFE START CHECK.
-FLAME IS ESTABLISHED.
-SOMETIMES THE CONTROL LOCKS OUT BEFORE THE THERMOSTAT OR CONTROLLING CIRCUIT IS SATISFIED.

2. DISCONNECT FLAMEROD LEAD FROM PRIMARY CONTROL. CONNECT (+) POSITIVE LEAD (DC) MICROAMPERE METER TO THE PRIMARY CONTROL TERMINAL. CONNECT THE (-) NEGATIVE MICROAMPERE METER LEAD TO THE FLAMEROD TERMINAL (SEE FIGURE 9) FLAME CURRENT MEASUREMENT.

2. RESET CONTROL, AFTER PREPURGE CYCLE, FLAME IS ESTABLISHED. A STABLE MICROAMPERE CURRENT OF .8 OR MORE IS REQUIRED FOR DEPENDABLE OPERATION.

PROBABLE CAUSE OF ERRATIC LOCKOUT:

1. FLAME PROVING CIRCUIT GROUNDED BY MOISTURE.
2. DAMAGED INSULATION ON FLAMEROD LEAD.
3. FLAMEROD IMPROPERLY POSITIONED IN FLAME (FIG 1)
4. POOR GROUND PATH TO PRIMARY CONTROL.
5. DEFECTIVE PRIMARY CONTROL.
6. READ MANUAL SECTION "FLAME SENSING".
7. APPLICABLE TO HONEYWELL S89 SERIES PRIMARY IGNITION CONTROLS: CONNECT L1 TO THE BLACK LEAD AND L2 TO THE WHITE LEAD EXITING THE S89 OTHERWISE THE S89 WILL NOT DETECT THE FLAME AND LOCK OUT.

NO

4. MICROAMPERE READING IS LESS THAN .8 OR UNSTABLE.

PROBALE CAUSES:

1. EXTREMELY POOR COMBUSTION LEVEL.
2. FLAMEROD IMPROPERLY POSITIONED IN FLAME.
3. DEFECTIVE PRIMARY CONTROL.

BURNER CYCLES ERRATICALLY

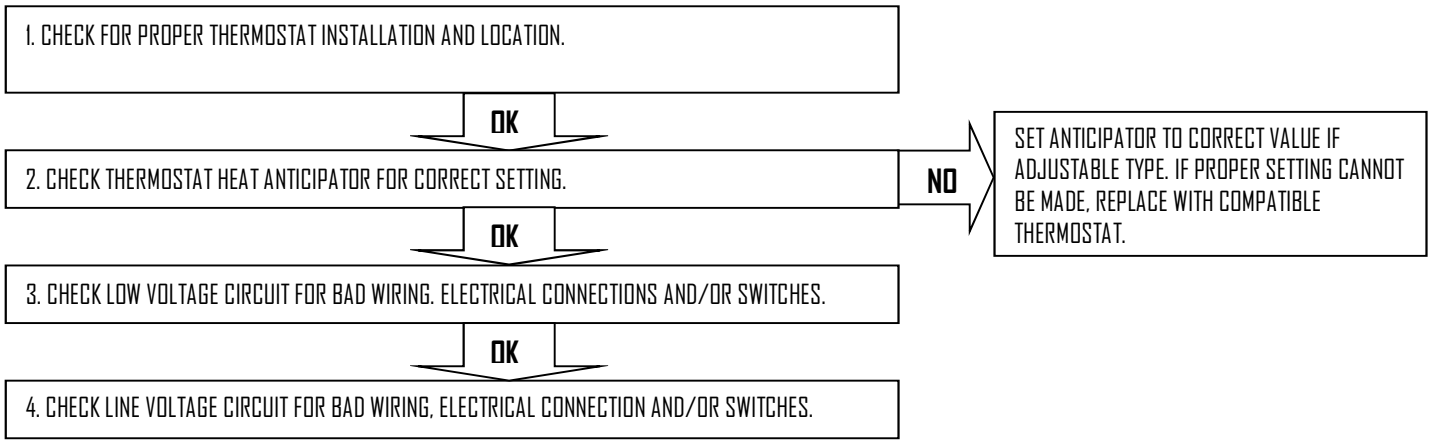

NOTE: YOU MUST DETERMINE WHAT THE CORRECT ANTICIPATOR SETTING IS BY INSPECTING THE CONTROLLING DEVICE AT THE POINT WHERE THE THERMOSTAT WIRES TERMINATE. TYPICALLY, THIS INFORMATION CAN BE FOUND ON THE BODY OR COVER OF THE CONTROLLING DEVICE.WHEN DETERMINING THE CURRENT DRAW OF THE DUAL HEAD GAS VALVE, BE SURE TO CONSIDER THE SEPARATE AMPERE VALUES FOR EACH VALVE. THESE USUALLY ARE STENCILED ON THE VALVE BODY, AND MUST BE ADDED TOGETHER TO OBTAIN THE CORRECT SUM. (EXAMPLE .4 + .2 = .6). WHEN THE CURRENT DRAW CANNOT BE DETERMINED ACCURATELY BY THE ABOVE METHOD, MEASURE THE CURRENT WITH AN AMPERE METER USING THE 1 AMP SCALE. CONNECT THE METER LEADS IN SERIES WITH ONE OF THE THERMOSTAT LEADS FOR THE ACCURATE READING.

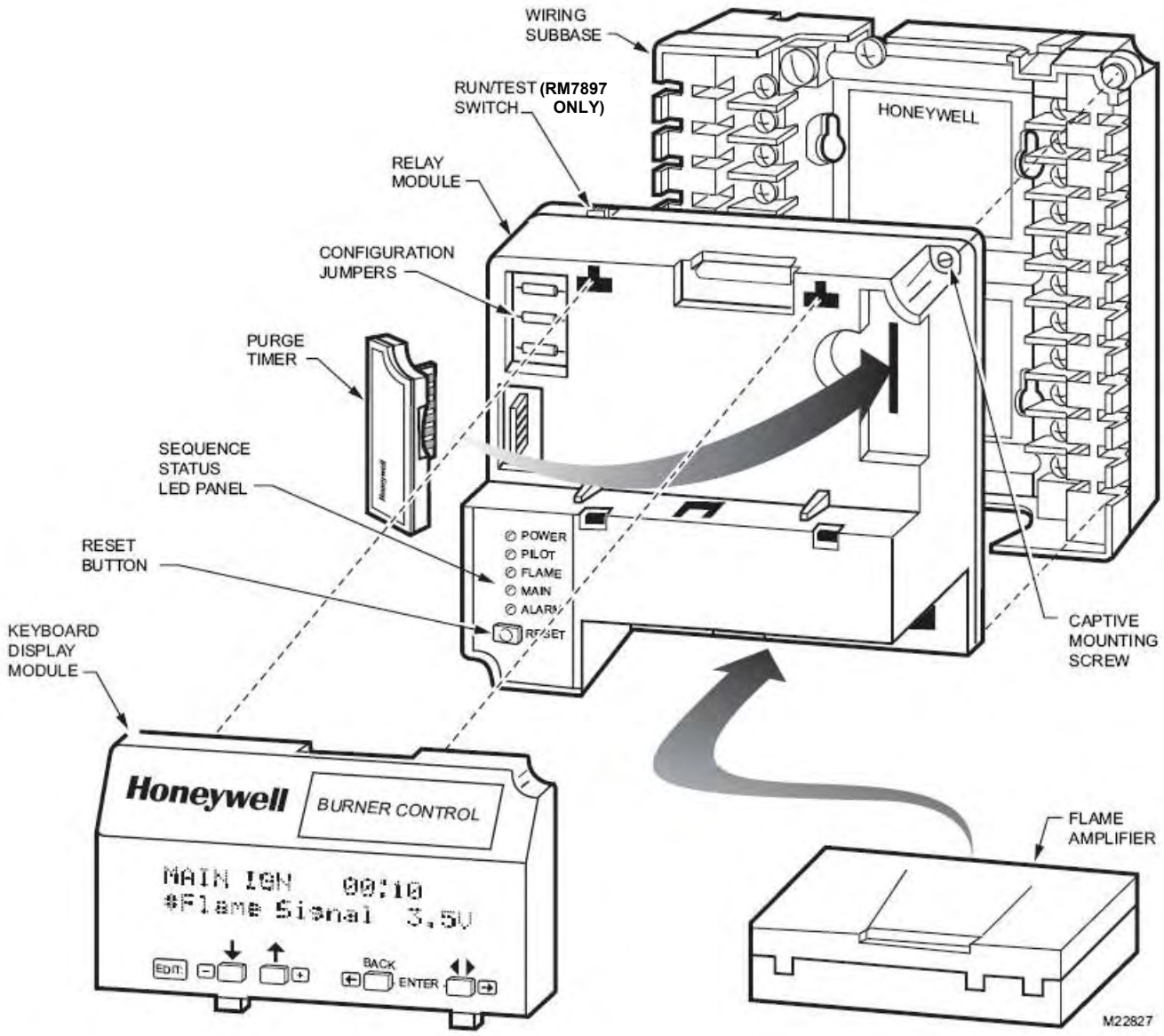

RM7897A,C Relay Module, exploded view.
Figure 10

Safety Shutdown (Lockout) Occurs if:

1. INITIATE PERIOD
   a. Purge card is not installed or removed.
   b. Purge card is bad.
   c. Configuration jumpers have been changed (after 200 hours)- Fault Code 110.
   d. AC line power errors occurred, see Operation.
   e. Four minute INITIATE period has been exceeded

2. STANDBY PERIOD
   a. Airflow lockout feature is enabled and the airflow switch does not close after ten seconds or within the specified purge card timing.
   b. Flame signal is detected after 240 seconds.
   c. Ignition/pilot valve terminal is energized.
   d. Main valve terminal is energized.
   e. Delayed main valve terminal is energized (RM7897C).
   f. Internal system fault occurred.
   g. Purge card is removed.
   h. Purge card is bad.
   i. Preignition interlock open.

3. PREPURGE PERIOD
   a. Airflow lockout feature is enabled and the airflow switch opens.
   b. Ignition/pilot valve terminal is energized.
   c. Main valve terminal is energized.
   d. Delayed main valve terminal is energized (RM7897C).
   e. Internal system fault occurred.
   f. Purge card is removed.
   g. Purge card is bad.
   h. Flame signal is detected for 30 seconds.
   i. Preignition interlocks open during standby.

4. RUN PERIOD
   a. No flame present (JR2 removed).
   b. Airflow lockout feature is enabled and the airflow switch opens.
   c. Main valve terminal is not energized.
   d. Delayed main valve terminal is not energized (RM7897C).
   e. Internal system fault occurred.
   f. Purge card is removed.
   g. Purge card is bad.
   h. Ignition terminal is energized.

5. MAIN FLAME ESTABLISHING PERIOD (MFEP) (RM7897A, terminal 21; RM7897C, terminal 8)
   a. Airflow lockout feature is enabled and the airflow switch opens.
   b. Ignition terminal is energized.
   c. Ignition/pilot valve terminal is energized.
   d. Main valve terminal is energized.
   e. Delayed main valve terminal is energized
   f. Loss of flame signal.
   g. Internal system fault occurred.
   h. Purge card is removed.
   i. Purge card is bad.

Fault Code	System Failure	Recommended Troubleshooting
Code 1-1 *Low AC Line Voltage*	Low AC Line detected.	**1.** Check the relay module and display module connections. **2.** Reset and sequence the Relay Module. **3.** Check the 7800 power supply and make sure that frequency and voltage meet specifications. **4.** Check the backup power supply, as appropriate.
Code 1-2 *AC Quality Problem*	Excessive noise or device running on slow, fast, or AC line dropout detected.	
Code 2-1 *Unexpected Flame Signal*	Flame sensed when no flame is expected during STANDBY or PURGE.	**1.** Check that flame is not present in the combustion chamber; correct any errors. **2.** Make sure that the flame amplifier and flame detector are compatible. **3.** Check the wiring and correct any errors. **4.** Remove the flame amplifier and inspect its connections. Reseat the amplifier. **5.** Reset and sequence the relay module. **6.** If the code reappears, replace the flame amplifier and/or the flame detector. **7.** If the fault persists, replace the relay module.
Code 2-2 *Flame Signal Absent*	No-flame time present at the end of the Pilot Flame Establishing Period; lost during the Main Flame Establishing Period or during RUN.	**1.** Measure the flame signal. If one exists, verify that it meets specification. **2.** Make sure that the flame amplifier and flame detector are compatible. **3.** Inspect the main fuel valve(s) and valve connections(s). **4.** Verify that the fuel pressure is sufficient to supply fuel to the combustion chamber. Inspect the connections to the fuel pressure switches. Make sure they are functioning properly. **5.** Inspect the Airflow Switch and make sure that it is functioning properly. **6.** Check the flame detector sighting position; reset and recycle. Measure the flame signal strength. Verify that it meets specifications. If not, refer to the flame detector and/or flame amplifier checkout procedures in the installation instructions. **7.** Replace the flame amplifier and/or the flame detector, if necessary. **8.** If the fault persists, replace the relay module.
Code 2-3 *Flame Signal Overrange*	Flame signal value is too high to be valid.	**1.** Make sure the flame detector and flame amplifier are compatible. **2.** Remove the flame amplifier and inspect its connections. Reset the flame amplifier. **3.** Reset and sequence the relay module. **4.** Check the flame detector sighting position; reset and recycle. Measure flame strength. Verify that it meets specifications. If not, refer to the flame detector and/or flame amplifier checkout procedures in the installation instructions. **5.** If the code reappears, replace the flame amplifier and/or the flame detector. **6.** If the fault persists, replace the relay module.
Code 3-1 *Running/ Interlock Switch Problem*	Running or Lockout Interlock fault during Prepurge.	**1.** Check wiring; correct any errors. **2.** Inspect the fan; make sure there is no air intake blockage and that it is supplying air. **3.** Make sure the Lockout Interlock switches are functioning properly and the contacts are free from contaminants. **4.** Reset and sequence the relay module to Prepurge (place the TEST/RUN Switch in the TEST position, if available). Measure the voltage between terminal 7 and G (ground); 120 Vac should be present. Switch TEST/RUN back to RUN. **5.** If steps 1 through 4 are correct and the fault persists, replace the relay module.

Blinking Fault Codes and Recommended Troubleshooting. (Continued)

Fault Code	System Failure	Recommended Troubleshooting
Code 3-2 *Running/ Interlock On During Standby*	Lockout Interlock powered at improper point in sequence or On in Standby.	**1.** Check wiring to make sure that the Lockout Interlocks are connected properly between terminals 6 and 7. Correct any errors. **2.** Reset and sequence the relay module. **3.** If the fault persists, measure the voltage between terminal 6 and G (ground), then between terminal 7 and G. If there is 120 Vac at terminal 6 when the controller is off, the controller switch may be bad or is jumpered. **4.** If steps 1 through 3 are correct and there is 120 Vac at terminal 7 when the controller is closed and the fault persists, check for a welded or jumpered Running Interlock or Airflow Switch. Correct any errors. **5.** If steps 1 through 4 are correct and the fault persists, replace the relay module.
Code 4-1 *Purge Card Problem*	No purge card or the purge card timing has changed from the original configuration.	**1.** Make sure the purge card is seated properly. **2.** Inspect the purge card and the connector on the relay module for any damage or contaminants. **3.** Reset and sequence the relay module. **4.** If the fault code reappears, replace the purge card. **5.** Reset and sequence the relay module. If the fault code persists, replace the relay module.
Code 4-2 *Wiring Problem/ Internal Fault*	Pilot (ignition) valve terminal, main valve, ignition or Main Valve 2 was on when it should be off.	**⚠ WARNING** **Electrical Shock Hazard; Fire or Explosion Hazard.** **Can cause severe injury, death or property damage.** Remove system power and turn off power supply. **1.** Remove system power and turn off fuel supply. **2.** Check wiring; correct any errors. **3.** Inspect Pilot Fuel Valve(s), both places, and connections. **4.** Reset and sequence the relay module. **6.** If the fault persists, replace the relay module.
Code 4-3 *Flame Amplifier Problem*	Flame not sensed, or sensed when it should be on or off.	**1.** Check wiring; correct any errors. **2.** Make sure the flame amplifier and flame detector are compatible. **3.** Remove the flame amplifier and inspect the connections. Reseat the amplifier. **4.** Reset and sequence the relay module. **5.** If the code reappears, replace the flame amplifier and/or the flame detector. **5.** If the fault persists, replace the relay module.
Code 4-4 *Configuration Jumper Problem*	The configuration jumpers differ from the sample taken at startup.	**1.** Inspect the jumper connections. Make sure the clipped jumpers were completely removed. **2.** Reset and sequence the relay module. **6.** If the fault persists, replace the relay module.
Code 5-1 *Preignition Interlock*	Preignition Interlock fault.	**1.** Check wiring and correct any errors. **2.** Check Preignition Interlock switches to assure proper functioning. **3.** Check fuel valve operation. **4.** Reset and sequence the relay module; monitor the Preignition Interlock status. **3.** If the fault persists, replace the relay module.

Fault Code	System Failure	Recommended Troubleshooting

Code 5-2 *High Fire Sw. or Low Fire Sw.*	Either High Fire Switch or Low Fire Switch failure.	**1.** Check wiring and correct any errors. **2.** Reset and sequence the relay module. **3.** Use manual motor potentiometer to drive the motor open and closed. Verify at motor switch that the end switches are operating properly. Use RUN/TEST switch if manual potentiometer is not available. **4.** Reset and sequence the relay module. **5.** If the fault persists, replace the relay module.
Code 5-3 *Man-Open Sw.; Start Sw. or Control On*	Man-Open Switch, Start Switch or Control On in the wrong operational state.	**1.** Check wiring and correct any errors. **2.** Make sure that the Manual Open Valve Switch, Start Switch and Control are operating properly. **3.** Stat Switch held “On” too long. **4.** Reset and sequence the relay module. **5.** Reset and sequence the relay module. If the fault persists, replace the relay module (RM7838A1014; RM7838B1013 or RM7838C1004 only).
Code 6-1 *Internal Faults*	Relay Module Self-Test failure.	**1.** Reset and sequence the relay module. **2.** If fault reappears, remove power from the device, reapply power, then reset and sequence the relay module. **3.** If the fault persists, replace the relay module.
Code 6-2 *Internal Faults*	Relay Module Self-Test failure.	**1.** Reset and sequence the relay module. **2.** If fault reappears, remove power from the device, reapply power, then reset and sequence the relay module. **3.** If fault does not repeat on the next cycle, check for electrical noise being copied into the relay module through the external loads or possibly an electrical grounding issue. **4.** If the fault persists, replace the relay module.
Code 6-3 *Device Specific*	Fault with special OEM input circuits.	**1.** Check wiring and operation of special OEM inputs. **2.** Reset and sequence the relay module. **3.** If fault reappears, remove power from the device, reapply power, then reset and sequence the relay module. **4.** If the fault does not repeat on the next cycle, check for electrical noise being copied into the relay module through the external loads or possibly an electrical grounding issue. **5.** If the fault persists, replace the relay module.
Code 6-4 *Accessory Fault*	Unused at this time.	-------
Code 7-7 *Unused*	Unused at this time.	-------

SECTION IV
SERVICE

Caution: Make sure that the main manual gas valves and main electrical power disconnect are turned off before opening burner or removing any parts for service. All cover plates, enclosures, and guards must be in place at all times, except during maintenance and servicing.

A. BURNER HEAD AND
ELECTRODE/SENSOR ASSEMBLY

The burner head, electrodes, and manifold pipe are part of the gas burner head assembly. (See Figure 13) To remove the burner head assembly, follow the procedure outlined below:

- Disconnect the union fitting closest to the burner in the gas pipetrain.
- Remove the four allen head screws that hold the manifold pipe to the burner housing.
- Remove the retaining nut that holds the hinged flange together and swing the fan housing slightly to the side. It may be necessary to disconnect the electrical supply to the control panel (if mounted on the burner). Before doing so, make sure the electrical supply is off.

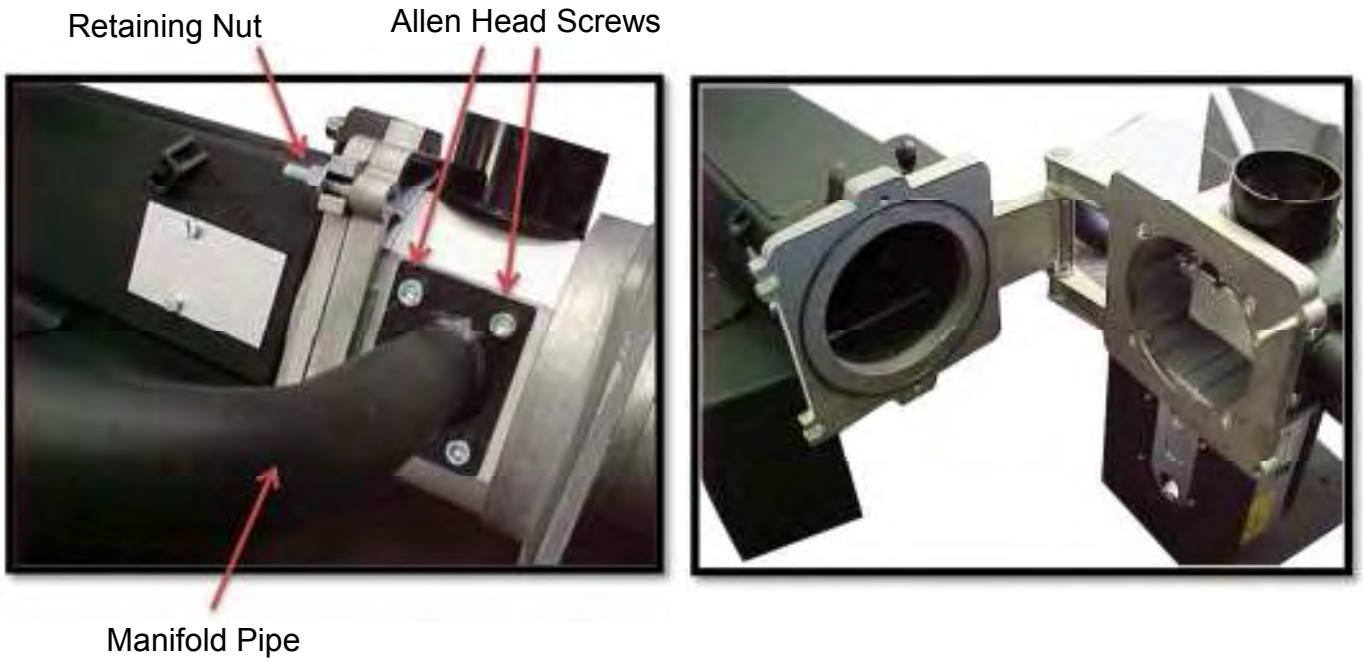

Figure 11

- Disconnect the ignition wire from the electrode and the sensing wire from the flame rod. Swing the fan housing to the side.
- Remove the allen screw that holds the head adjustment knob in place. Remove the knob.

- Remove the screw on the left side of the burner head assembly and pull the head assembly out of the burner.

Figure 12

When servicing, clean burner head ports, electrodes and sensor probe. Inspect the sensor probe and electrode wires and porcelain insulators carefully for hairline cracks, which might provide an electrical leak path that could short out the ignition spark, or flame signal.

Examine the electrode and sensor probe for any serious corrosion or deterioration of metal at the tips. Check for proper dimensional settings of the sensor probe and electrode (see Figure 1). Adjust and/or replace these assemblies as necessary. Make sure that the ignition and sensor probe wires go to the correct electrodes and the ignition wire boot is in place over the electrode porcelain.

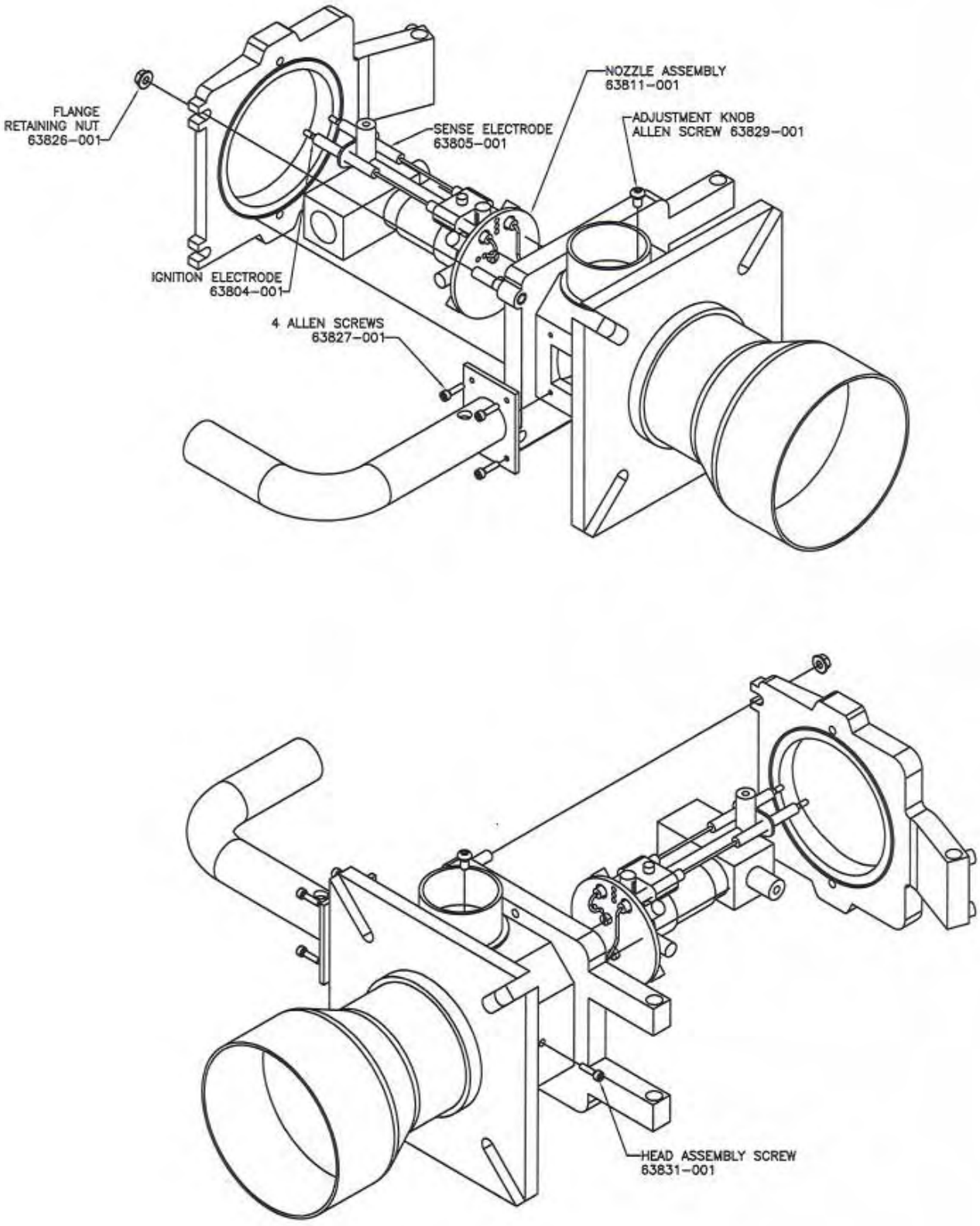
FLANGE
RETAINING NUT
63826-001
NOZZLE ASSEMBLY
63811-001
SENSE ELECTRODE
63805-001
ADJUSTMENT KNOB
ALLEN SCREW 63829-001
IGNITION ELECTRODE
63804-001
4 ALLEN SCREWS
63827-001
HEAD ASSEMBLY SCREW
63831-001

Figure 13

B. AIR PROVING SWITCH

The Air Proving Switch is mounted inside the junction box on the right side of the burner housing. A tube connects the air proving switch to a fitting on the side of the blower housing assembly. The tubing allows pressurized air from the blower housing to travel to the pressure switch causing the diaphragm to close a set of micro-switch contacts, thus completing the circuit. The function of the Air Proving Switch is to ensure that the blower motor and blower wheel are developing sufficient combustion air. Should the blower motor fail or the blower wheel malfunction, the voltage to the gas valves is interrupted.

1. The Air Proving Switch should never require maintenance. However, should nuisance lockouts occur, the switch can be checked. Disconnecting the 24V leads from the Air Proving Switch and "jumpering" the leads together will bypass the switch's function. If the burner functions correctly, the switch is malfunctioning and should be replaced.

WARNING: If a jumper is used to check the switch it **must** be removed and the Air Proving Switch reconnected or an unsafe condition can occur resulting in **property damage, personal injury or death**.

2. As mentioned above, the switch should never require maintenance. However a pinched or blocked tube will shut off the flow of pressurized air to the diaphragm creating a failure similar to a bad Air Proving Switch. Always check to ensure that the clear tubing is not pinched.

C. COMBUSTION AIR BLOWER AND MOTOR

1. Cleaning of the combustion air blower is required if the blades show an accumulation of dust and lint, or if the character of the flame indicates a deficiency of combustion air.

2. The motor and blower wheel are removed as one assembly. Locate the motor wires in the electrical panel. Note the wire connection points in the terminal block and disconnect the motor wires from the terminal block. Remove the two (2) bolts securing the motor to the burner housing.

CAUTION: Do not remove blower wheel from motor shaft during periodic cleaning.

3. Should removal of the blower wheel be necessary for cleaning or replacement of either it or the motor, the blower wheel must be positioned correctly on the motor shaft. (Figure 14)

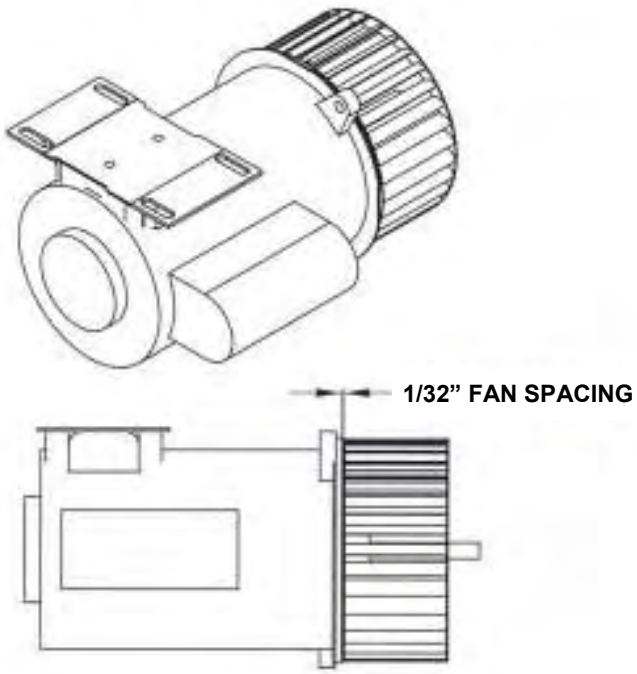

Figure 14

D. GAS PRESSURE SWITCHES

1. The gas pressure switches should never require maintenance. If nuisance problems persist, the switches can be temporarily "jumpered" out to bypass the switch's function. If the burner functions correctly, the switch is malfunctioning.

WARNING: If a jumper is used to check the switch it **must** be removed and the switch reconnected or an unsafe condition can occur resulting in **property damage, personal injury or death**.

TECHNICAL INFORMATION
"Troubleshooting Guide"
NUISANCE LOCKOUTS/FLAME SENSING PROBLEMS

Wayne's LC1500 series gas burners that utilize a flame rod, prove flame through the process of flame rectification.

One of the most common problems with gas appliances utilizing this type of electronic flame sensing system is the "nuisance lockout". Lockouts are not generally due to the burner failing to ignite, but rather simply the failure of the system to sense the establishment of flame. Should this situation exist for a period of time longer than the ignition control's pre-programmed lockout timing, the control will shut down or go into permanent lockout. The only way to get the burner to recycle is to:

- On burners utilizing the Honeywell S89 primary control, turn the on/off switch to "OFF" for five seconds, then return to "ON" position.

- On burners utilizing a control equipped with a manual reset, push the reset button.

The following situations can lead to flame sensing problems and can be checked without disassembling the main burner:

- The burner is not properly grounded to "earth ground".
- The ignition control is not properly grounded to the burner itself. Using an ohmmeter, check the wire attached to both parts for good contact and continuity.
- The burner ignition control is polarity sensitive. The polarity of the incoming line voltage may be reversed. Verify that black and white wires are hot and neutral respectively, and that they are connected to the corresponding black and white wires on the burner.

The remaining checks and/or adjustments require removal of the gas train:

- Electrical continuity from the "SENSE" terminal of the ignition control to the end of the flamerod may be compromised at some point. Check all quick-connect terminations and connections. Check the continuity with an ohmmeter while flexing wires to assure no hidden conductor breakage exists. If replaced, wiring must be of equal, or heavier gauge and equal, or better temperature rating.

- The flamerod probe may be grounded out. Assure that the flamerod probe is not touching the burner head. The probe should be positioned as indicated in Figure 1.

- The flamerod probe should be free of soot and creosote. Deposits insulate the probe, making it difficult to pass the electrical charge to the flame. The probe can be cleaned with steel wool, emery paper or fine sandpaper. NOTE: This is the leading cause of nuisance lockouts in dual-fuel wood/gas fired appliances.

- The flamerod probe may be burned away. Check it against dimensions on the ELECTRODE SETTINGS drawing. (Figure 1)

- The dimensional location of the flamerod probe may be incorrect, or the probe may be distorted. Check it against dimensions on the ELECTRODE SETTINGS drawing and adjust if necessary. (Figure 1)

- The spark electrode gap may be incorrect, resulting in no spark or an inadequate spark that will not ignite the gas properly. Check the electrode gap against the ELECTRODE SETTINGS drawing and adjust if required. (Figure 1)

- The high voltage lead wire from the ignition transformer to the tip of the spark electrode may be broken, preventing the high voltage current from getting to the electrode tip. Check all connections thoroughly and/or check to continuity of the lead wire assembly with an ohmmeter.

Once all of the items listed previously have been carefully checked and corrected as necessary, reinsert the gas train assembly into the burner. **NOTE:** Be careful not to accidentally reposition either the flamerod probe or electrode during reinstallation of the gas train assembly.

If, after all of the above listed items have been carefully checked, the burner still fails to work, it is due to one or more of the following problems:

1. Unit sparks and burner lights momentarily but will not stay lit. Ignition control module is malfunctioning and must be replaced.

2. Unit does not spark. Ignition transformer is bad and must be replaced.

DRAWINGS AND PARTS LIST

LC1500 with S89F Controller

- S89F Component Assembly with Parts List
- S89F Component Box Assembly
- Burner Final Assembly Exploded View 1
- Burner Parts List
- Burner Final Assembly
- Burner Final Assembly Dimensions

LC1500 with RM7895 / RM7897 Controller

- *See Honeywell RM7895 / RM7895 troubleshooting section for component assembly*
- RM7895 / RM7897 Component Box Assembly
- Burner Final Assembly Exploded View 1
- Burner Final Assembly Exploded View 2
- Burner Parts List
- Burner Final Assembly
- Burner Final Assembly Dimensions

Gas Train System

- Exploded View with Parts List
- Assembled View
- Wiring Diagram

Mounting Flanges

- Dimensional Drawings

NOTE: A parts list for your Gas Burner Body and separate gas Train Assembly can be generated directly from the Wayne Combustion Systems' website. Visit our website at www.waynecombustion.com. Enter the SPECIFICATION NUMBER of your Gas Burner Body or the Gas Train in the Product Search box. Click on Search and follow the results page to a PRODUCT PARTS LIST. Print the PRODUCT PARTS LIST for your reference by clicking on the Print This Page icon located near the top right of the page.

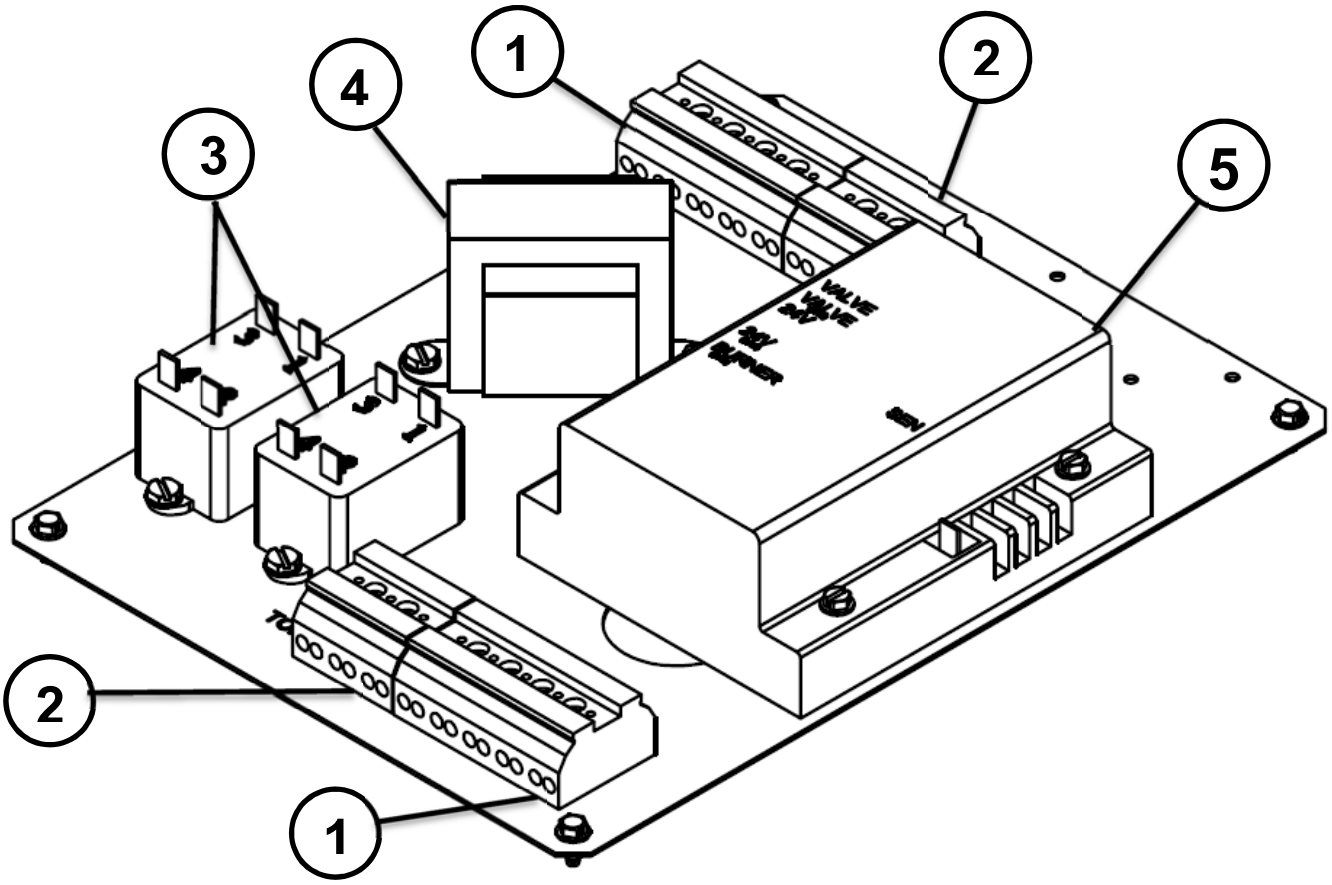

Item	Part Number	Description	Qty
1	63592-005	Terminal Strip, 5 Pole	2
2	63592-003	Terminal Strip, 3 Pole	2
3	62406-002	Relay, 24V 50/60 Hz	2
4	60186-004	Transformer, 120V/24V 50/60 Hz	1
5	62759-002	Control, Primary S89F	1
6	63594-002	Light, Valve On Green	1
7	63745-001	Switch, Rocker Off-On	1
8	63594-001	Light, Burner On Amber	1
9	63595-001	Latch, Enclosure	1

S89F COMPONENT MOUNTING ASSEMBLY
FIGURE 15

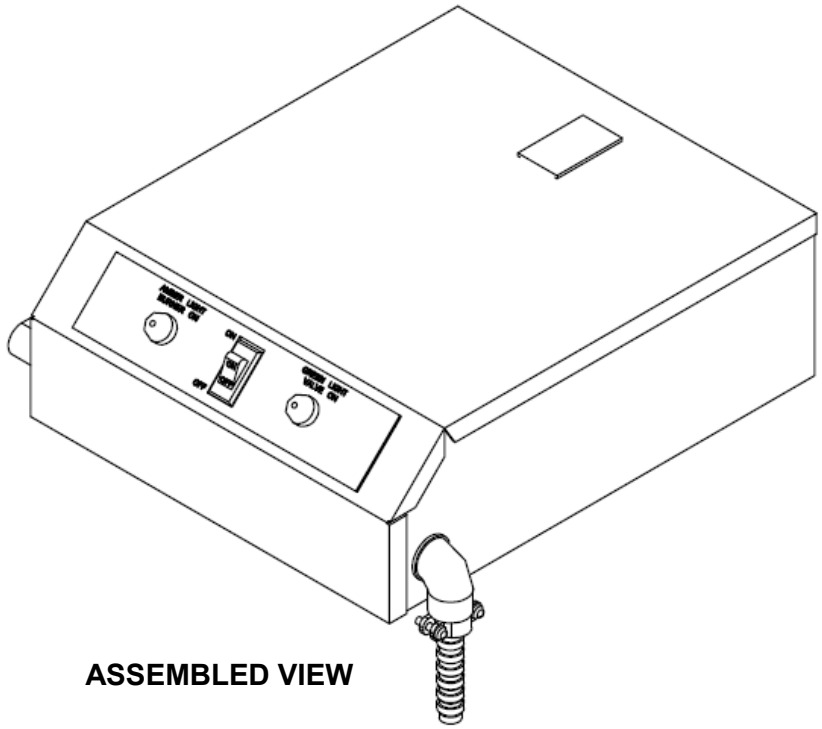

ASSEMBLED VIEW

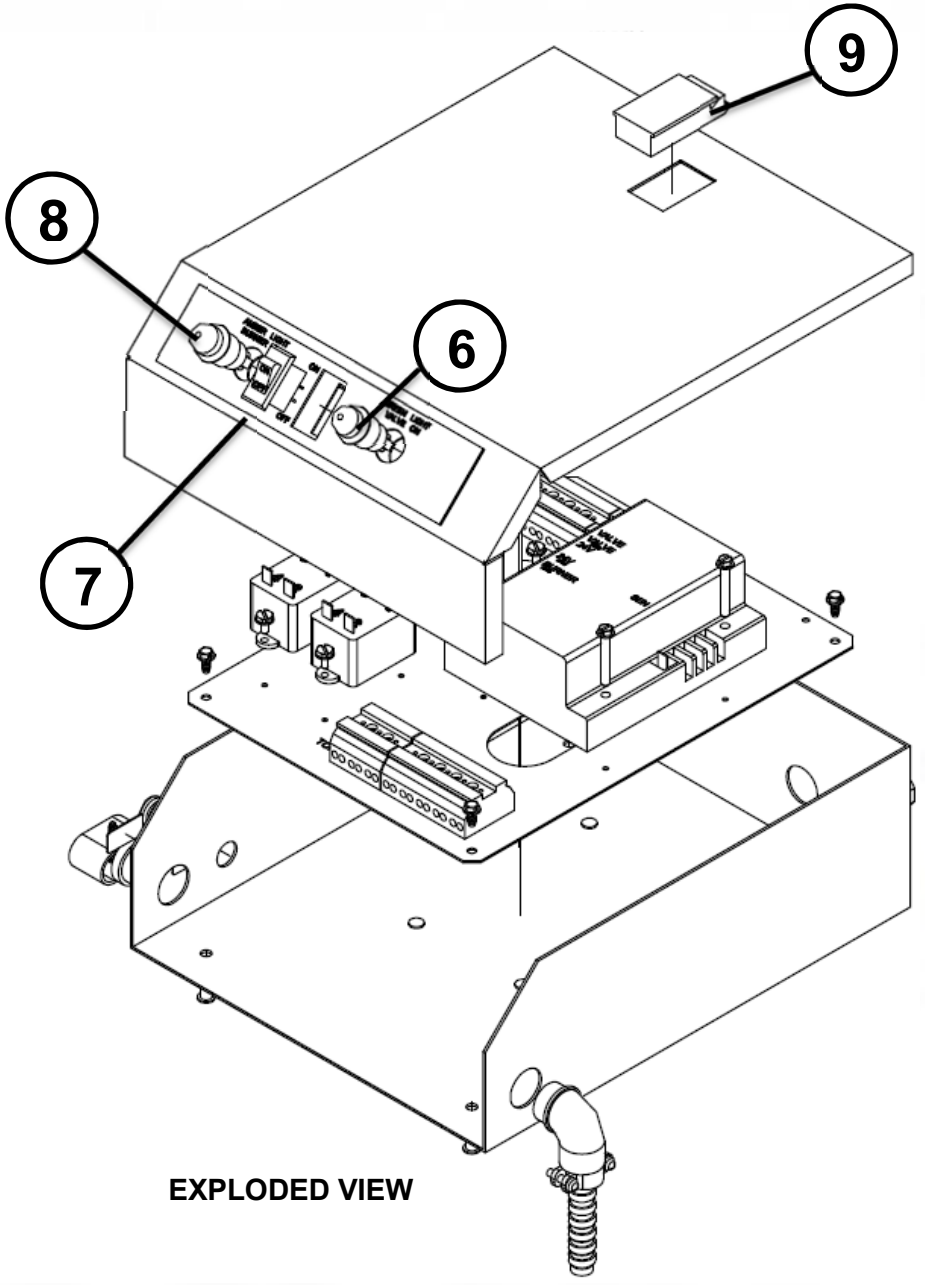

EXPLODED VIEW

S89F CONTROL BOX ASSEMBLY
FIGURE 16

LC1500 WITH HONEYWELL S89 CONTROL
FIGURE 17

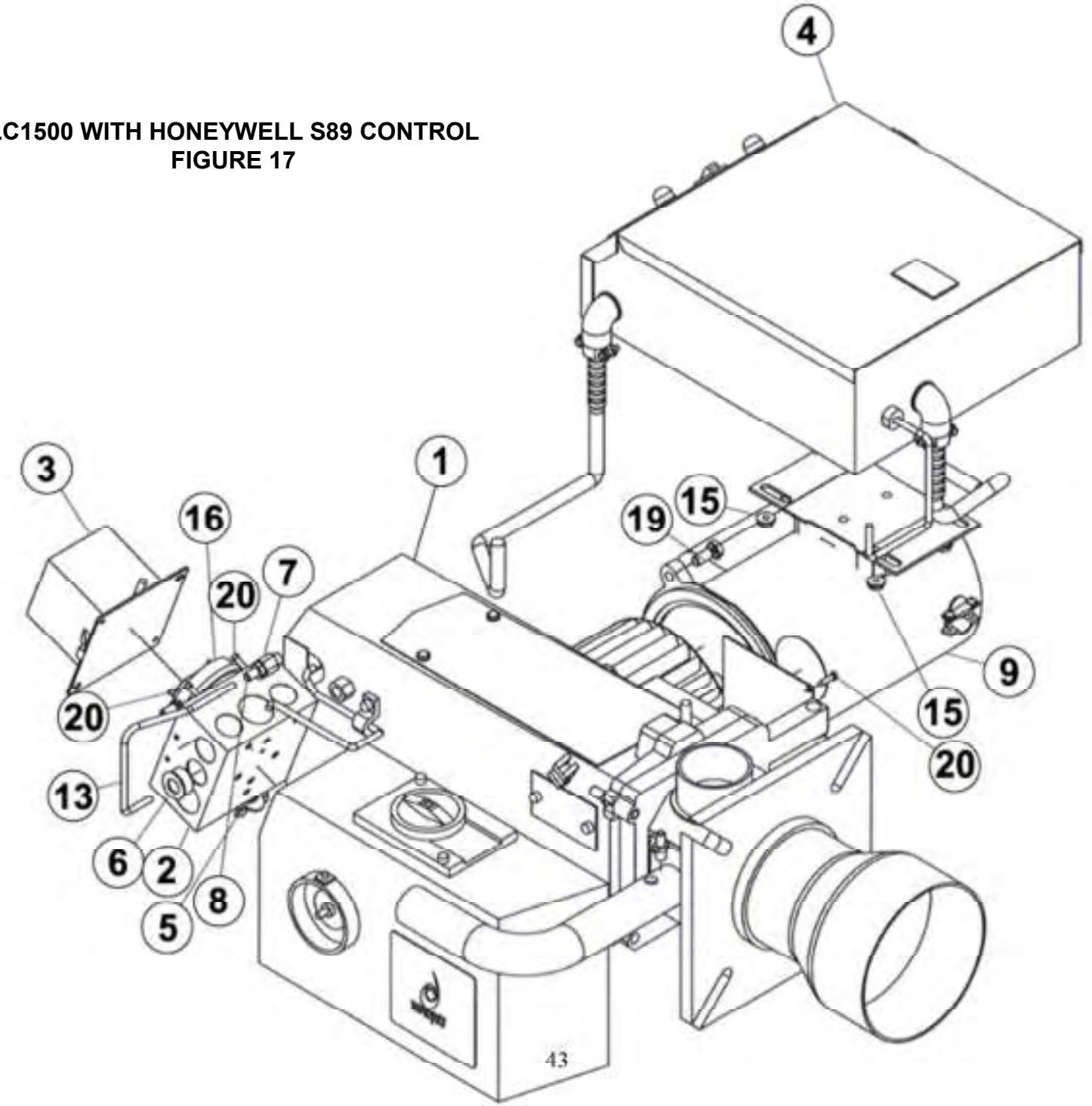

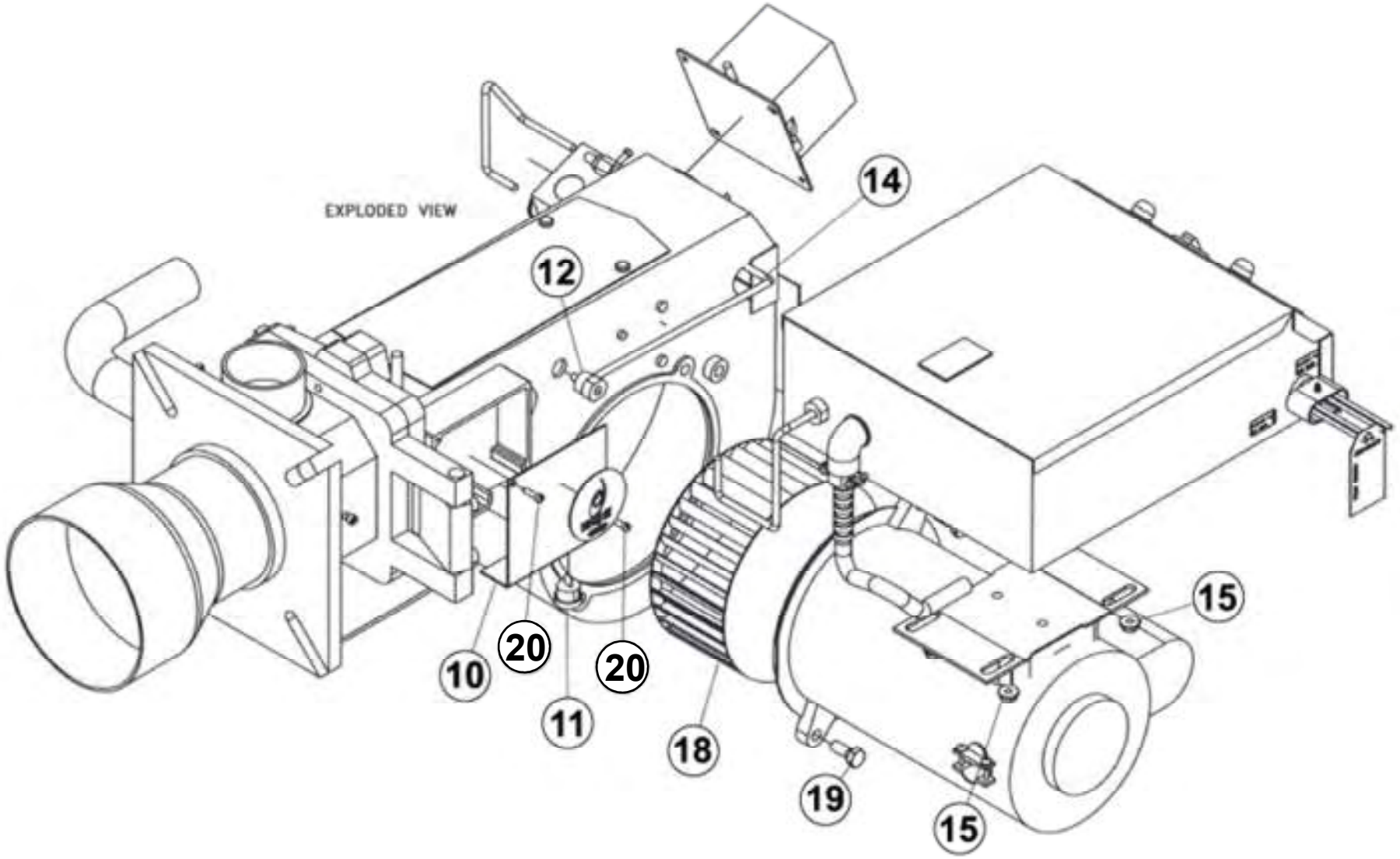

S89 ON-OFF FINAL ASSEMBLY
FIGURE 18

LC1500 with S89 Assembly Parts List
(Refers to Figures 17 and 18)

Item	Part No.	Description	Qty
1	63587-001	Housing LC1500 Base Burner	1
2	64015-003	Box, Junction	1
3	62407-001	Igniter, Transformer 120V	1
4	63591-001	Control Box Assembly	1
5	13801	Fitting, Conduit 3/8	2
6	13034	Bushing, Snap HEYCO SB – 875 – 8	1
7	63747-001	Fitting, Adapter 1/8 BSP to 1/8 NPT	1
8	550052	Fitting, Hose Barb 1/8”	2
9	63599-001	Motor, 1/2 HP 120V 50-60 Hz w/ bkt	1
10	63593-001	Plate, Sense Bushing	1
11	62389-002	Bushing, Terminal .25 QC	1
12	13026	Bushing Strain Relief .562 Hole	1
13	100985-003	Tube, Clear Vinyl 1/4 x 9.5	1
14	62909-003	Wire, Ignition HSG 14”	1
15	100408-002	Nut, Lock 1/4 – 20 HXSR	4
16	63263-005	Switch, Air Sensing SP .2	1
17	63743-001	Wire, Sense Electrode 13” 14GA (not shown)	1
18	63800-001	Blower Wheel 6.3 x 2.94	1
19	Motor Screw	Supplied with Burner	2
20	Screw	Supplied with Burner	4

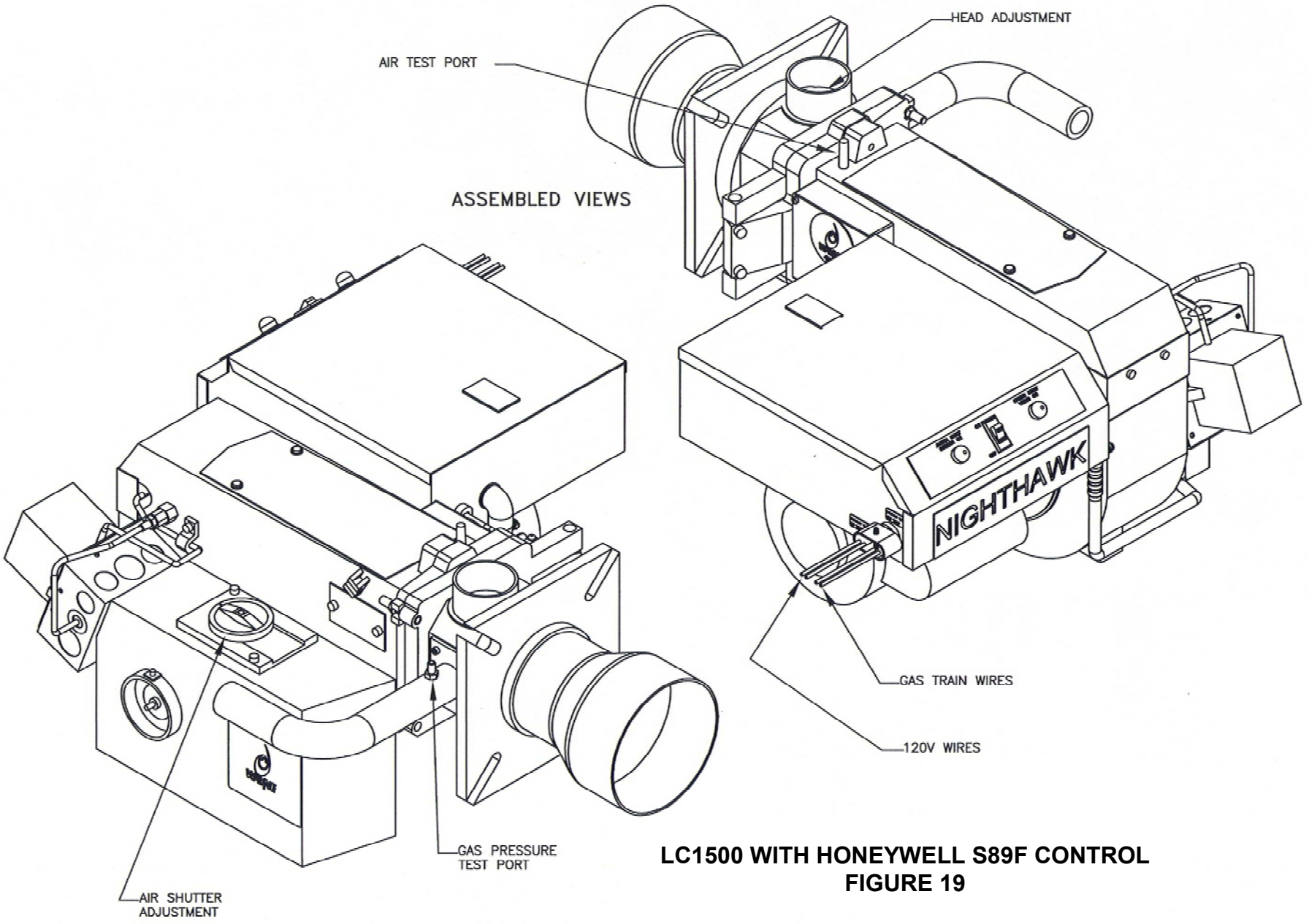

LC1500 WITH HONEYWELL S89F CONTROL
FIGURE 19

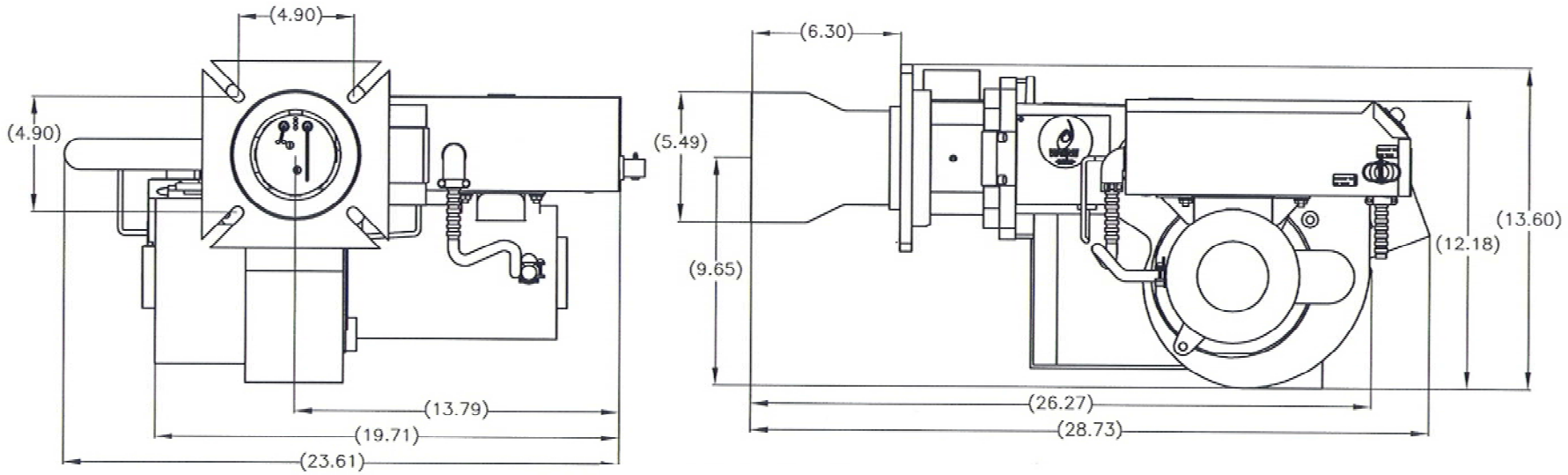

LC1500 WITH HONEYWELL S89F CONTROL
OVERALL DIMENSIONS

FIGURE 20

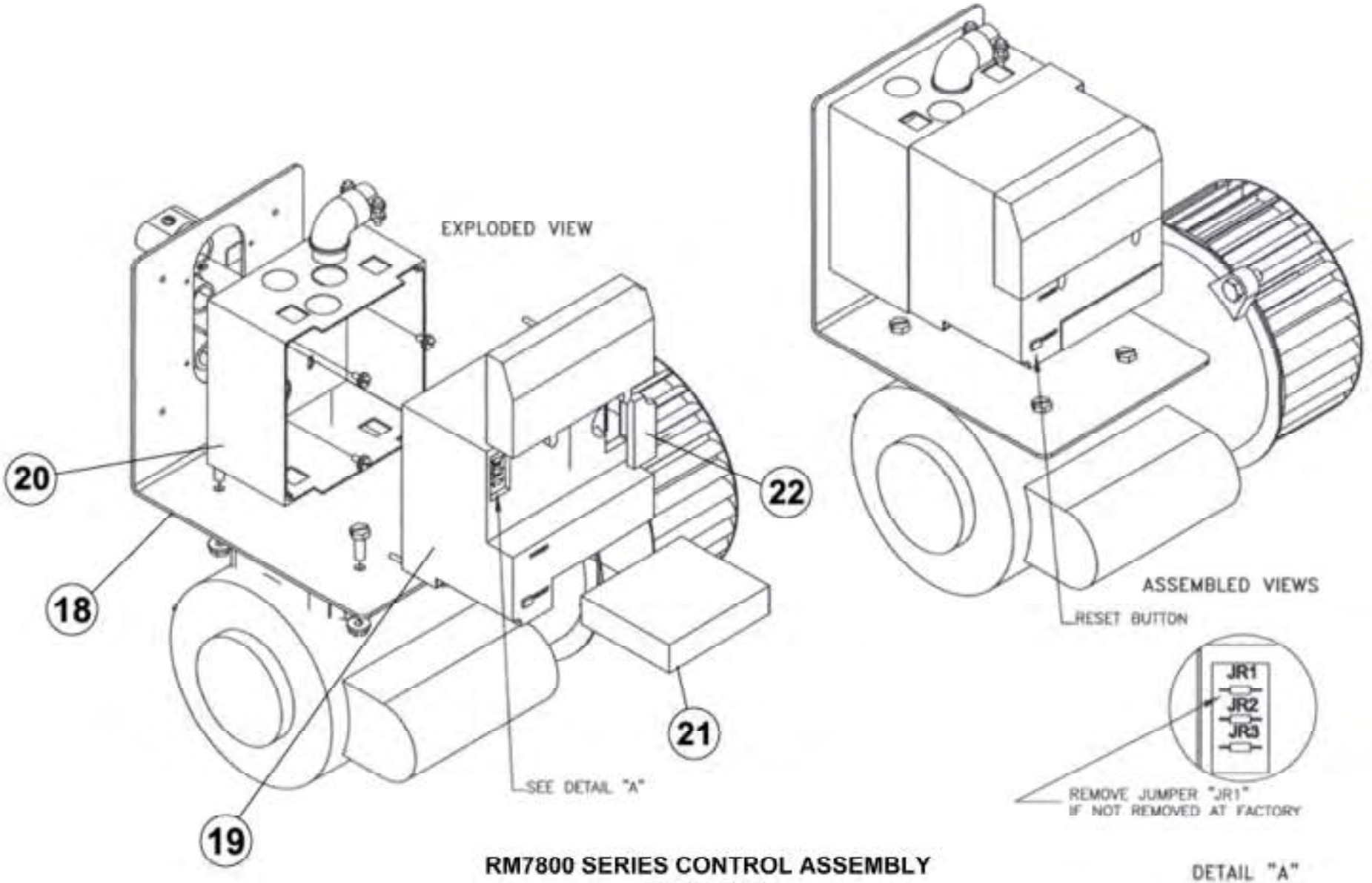

RM7800 SERIES CONTROL ASSEMBLY
FIGURE 21

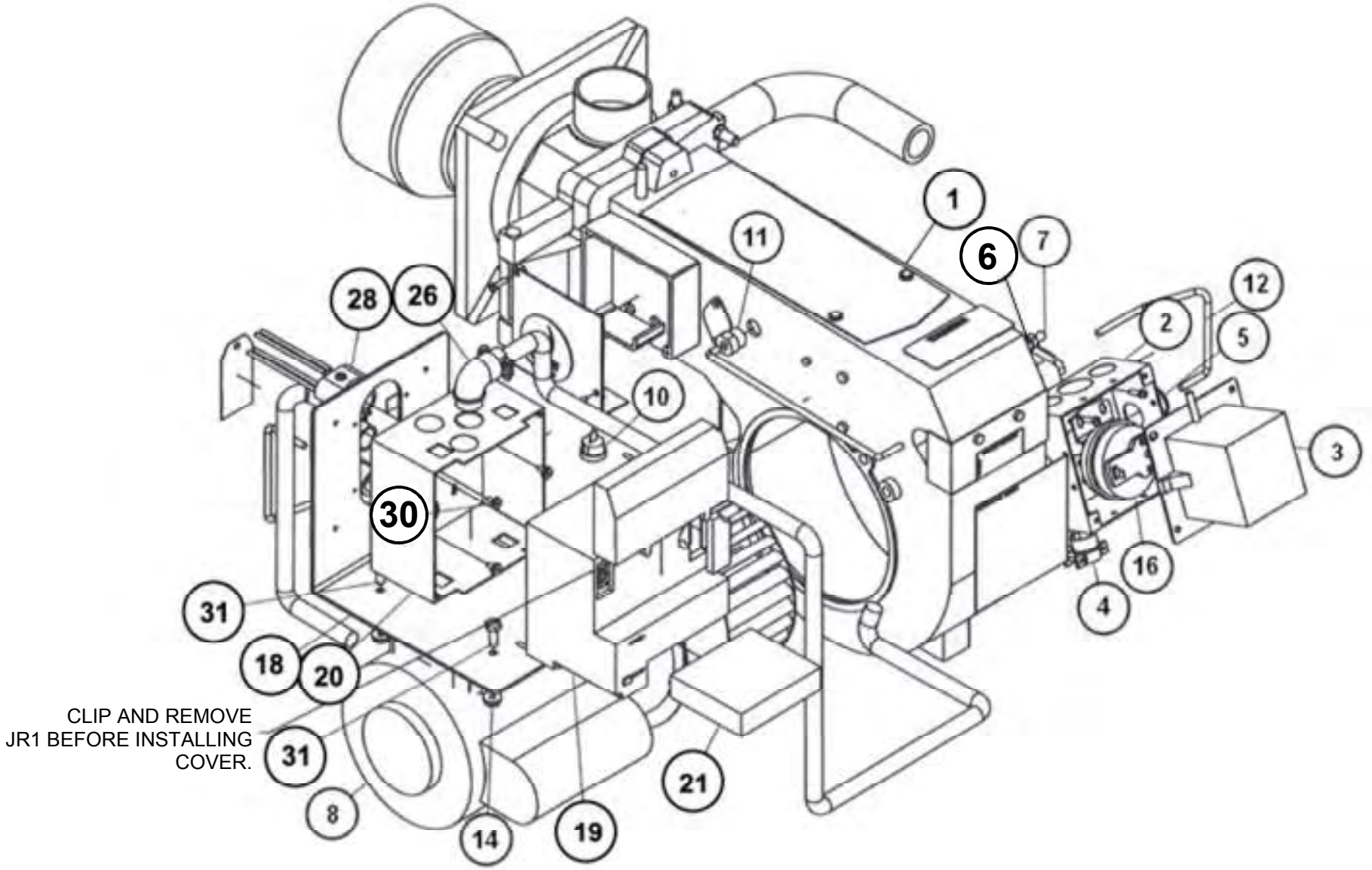

LC1500 WITH HONEYWELL RM7800 CONTROL
Figure 22

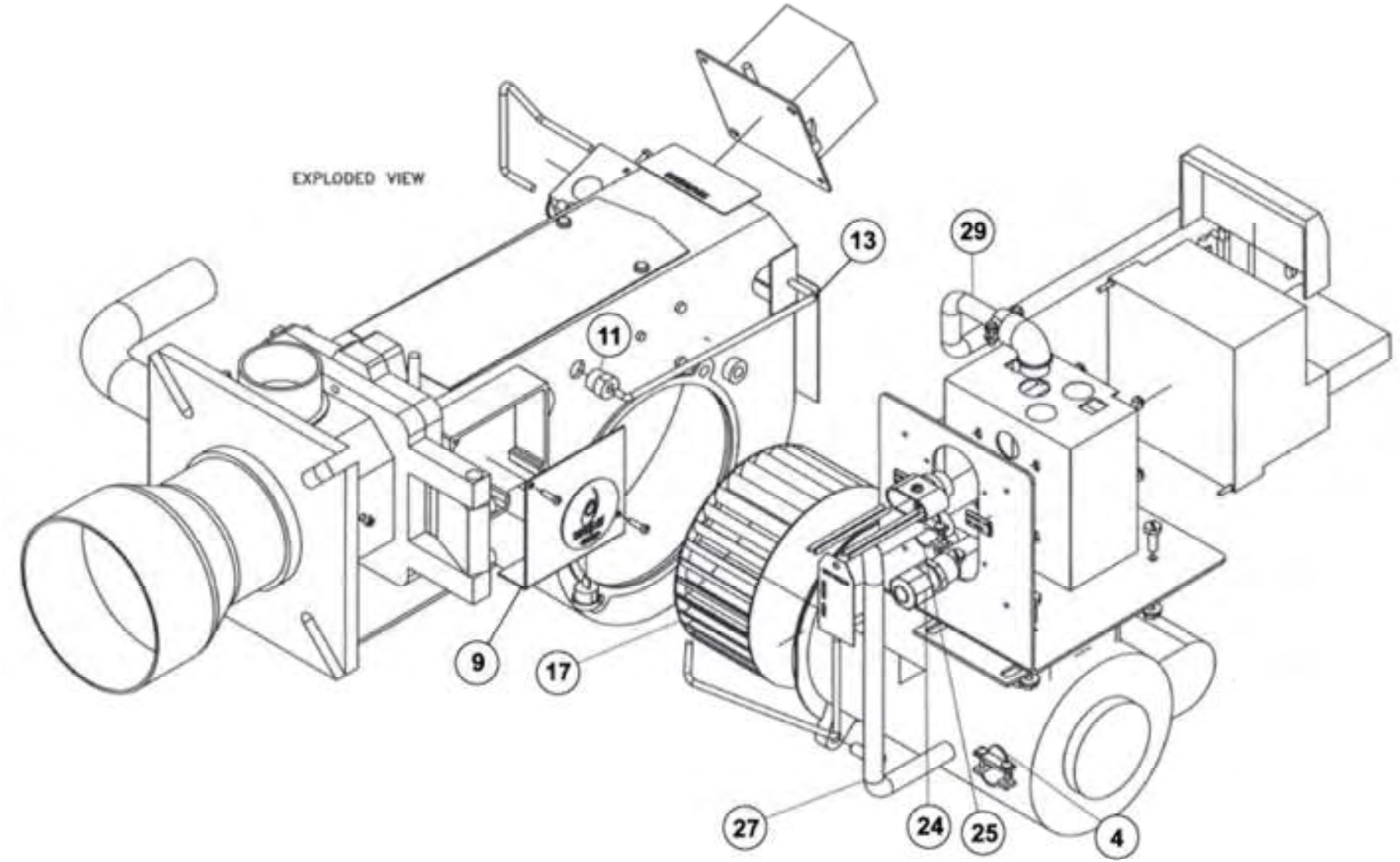

LC1500 WITH HONEYWELL RM7800 CONTROL
Figure 23

LC1500 with RM7895 Assembly Parts List
(Refers to Figures 21, 22, and 23)

Item	Part No.	Description	Qty
1	63587-001	Housing LC1500 Base Burner	1
2	64015-003	Box, Junction Deep Match	1
3	62407-001	Igniter, Transformer 120V (France)	1
4	13801	Fitting, Conduit 3/8	2
5	13034	Bushing, Snap-HEYCO SB-875-8	1
6	63747-001	Fitting, Adapter 1/8 BSP to 1/8 NPT	1
7	550052	Fitting, Hose Barb 1/8”	2
8	63599-001	Motor, 1/2 HP 120V 50-60 Hz w/BKT	1
9	63593-001	Plate, Sense Bushing	1
10	62389-002	Bushing, Terminal .25 QC	1
11	13026	Bushing, Strain Relief .562 Hole	1
12	100985-003	Tube Clear Vinyl 1/4 x 9.5	1
13	62909-003	Wire, Ignition HSG 14’	1
14	100408-002	Nut, Lock 1/4 - 20 HXSR	4
15	63743-001	Wire, Sense Electrode 13” 14GA (Not shown)	1
16	63263-005	Switch, Air Sensing SP .2	1
17	63800-001	Blower Wheel 6.3 x 2.94	1
18	63769-001	Bracket, Control Mounting “L”	1
19	63770-001	Primary Control Honeywell RM7891 A1002	1
20	63771-001	Wiring Subbase 7800B1011	1
21	63773-001	Rectification Flame Adapter	1
22	63774-001	30 Second Purge (7895)	1
23	63497-003	Wire, Control Sense (Not shown)	1
24	31954-001	Strain, Relief, Low Profile	1
25	13801-002	Fitting, Conduit 3/8 Thru	1
26	15323	Connector, Conduit 3/8” 90°	1
27	100169-019	Conduit, Flex 3/8” x 19.5	1
28	14429	Connector, Conduit Duplex	1
29	100169-016	Conduit, Flex 3/8” x 12	1
30	15731	Screw, 6 - 32 x .312 HEXSLT	4
31	18001	Screw, 1/4 – 20 x .75	4

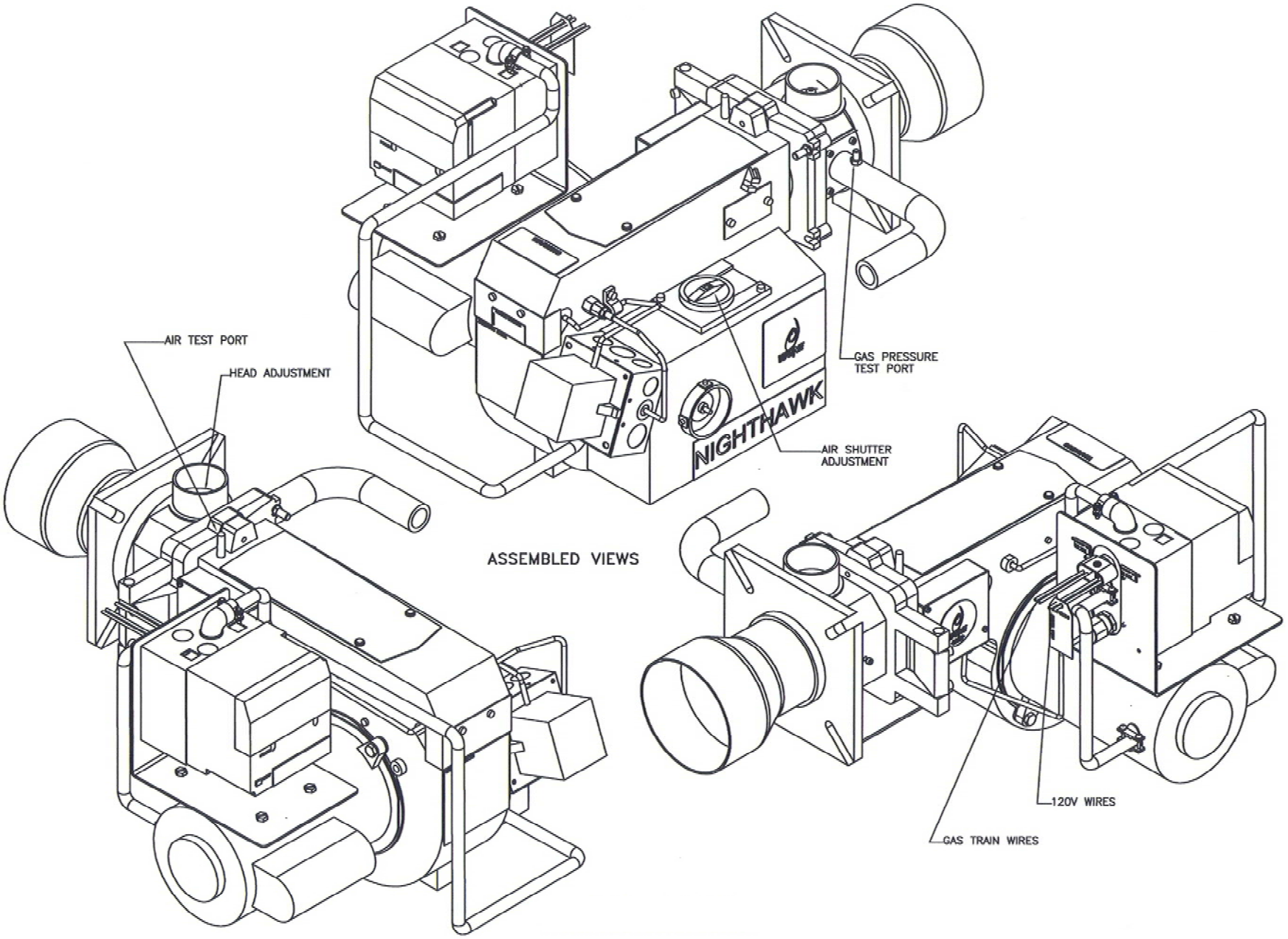

FIGURE 24: LC1500 WITH HONEYWELL RM7800 CONTROL

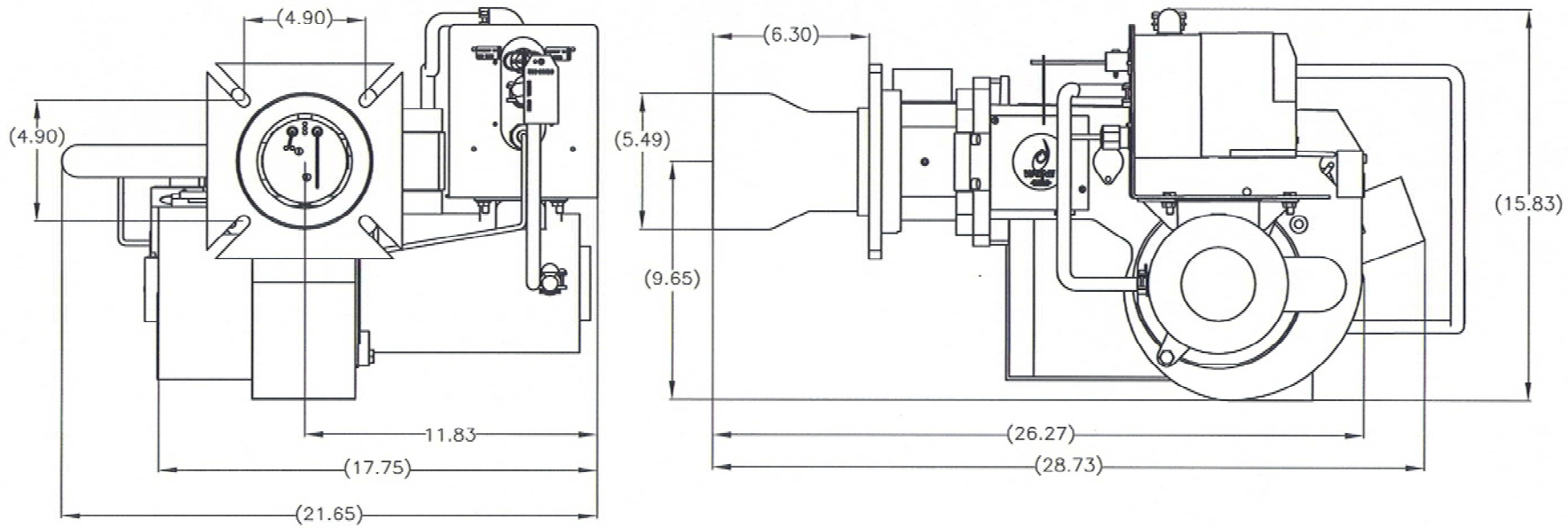

LC1500 WITH HONEYWELL RM7800 CONTROL
OVERALL DIMENSIONS

FIGURE 25

PARTS LIST	
ITEM	DESCRIPTION
1	MANUAL BALL VALVE
2	STANDARD MISC. PIPE FITTINGS
3	SAFETY SHUT OFF VALVE
4	CONDUIT
5	HIGH GAS PRESSURE SWITCH
6	LOW GAS PRESSURE SWITCH
7	DECAL
8	BUSHING

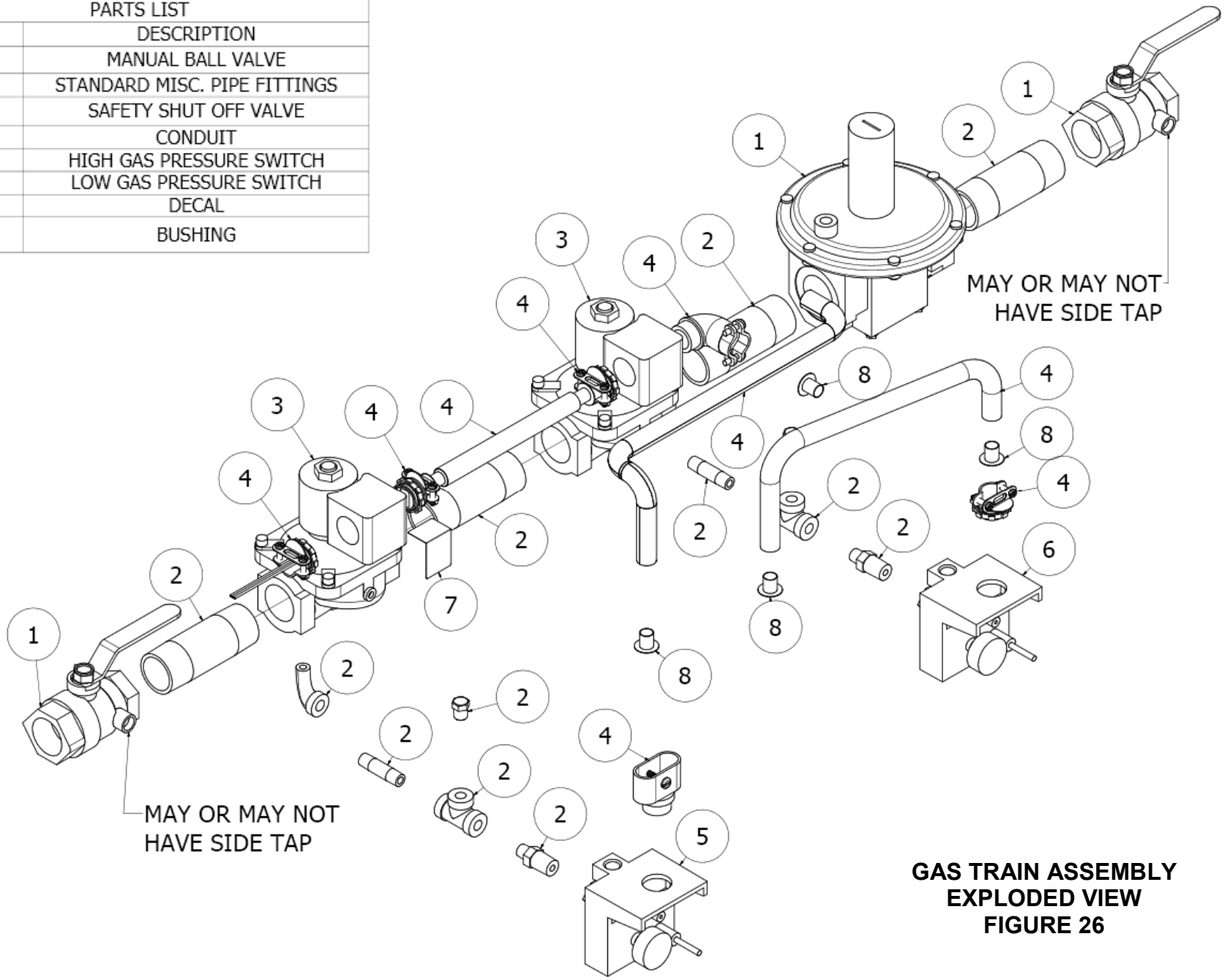

GAS TRAIN ASSEMBLY
EXPLODED VIEW
FIGURE 26

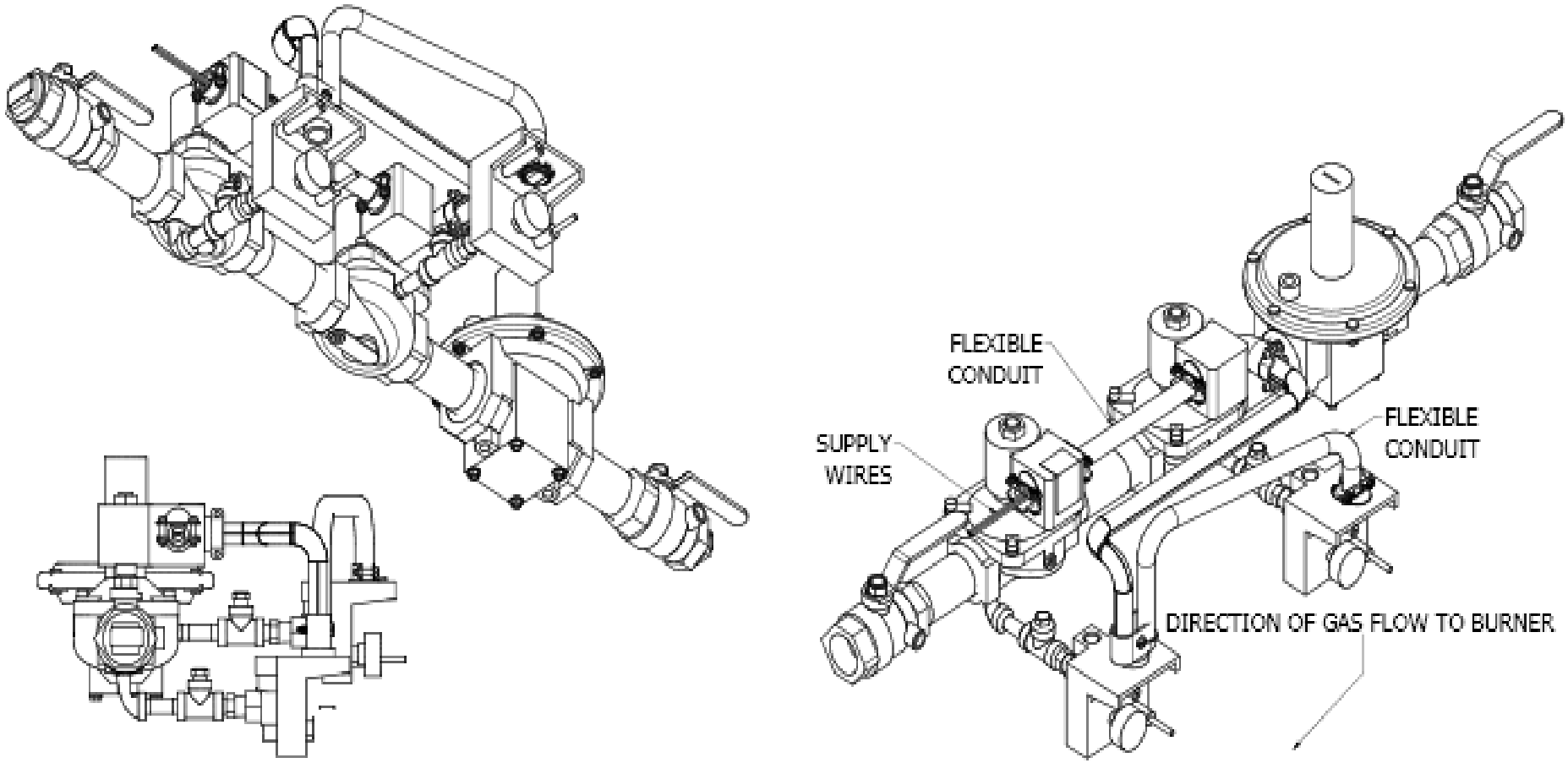

GAS TRAIN ASSEMBLY
FIGURE 27

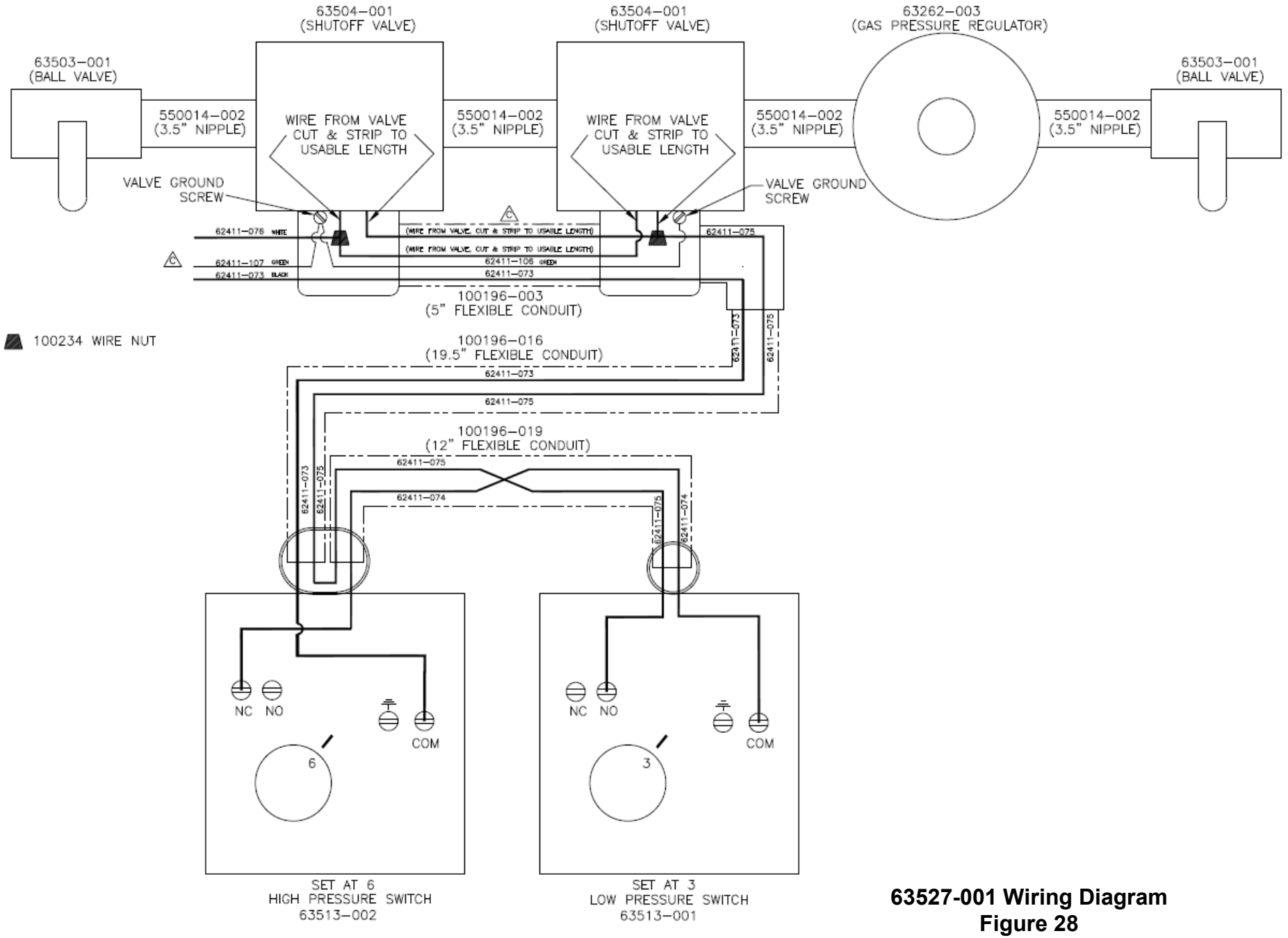

63527-001 Wiring Diagram
Figure 28

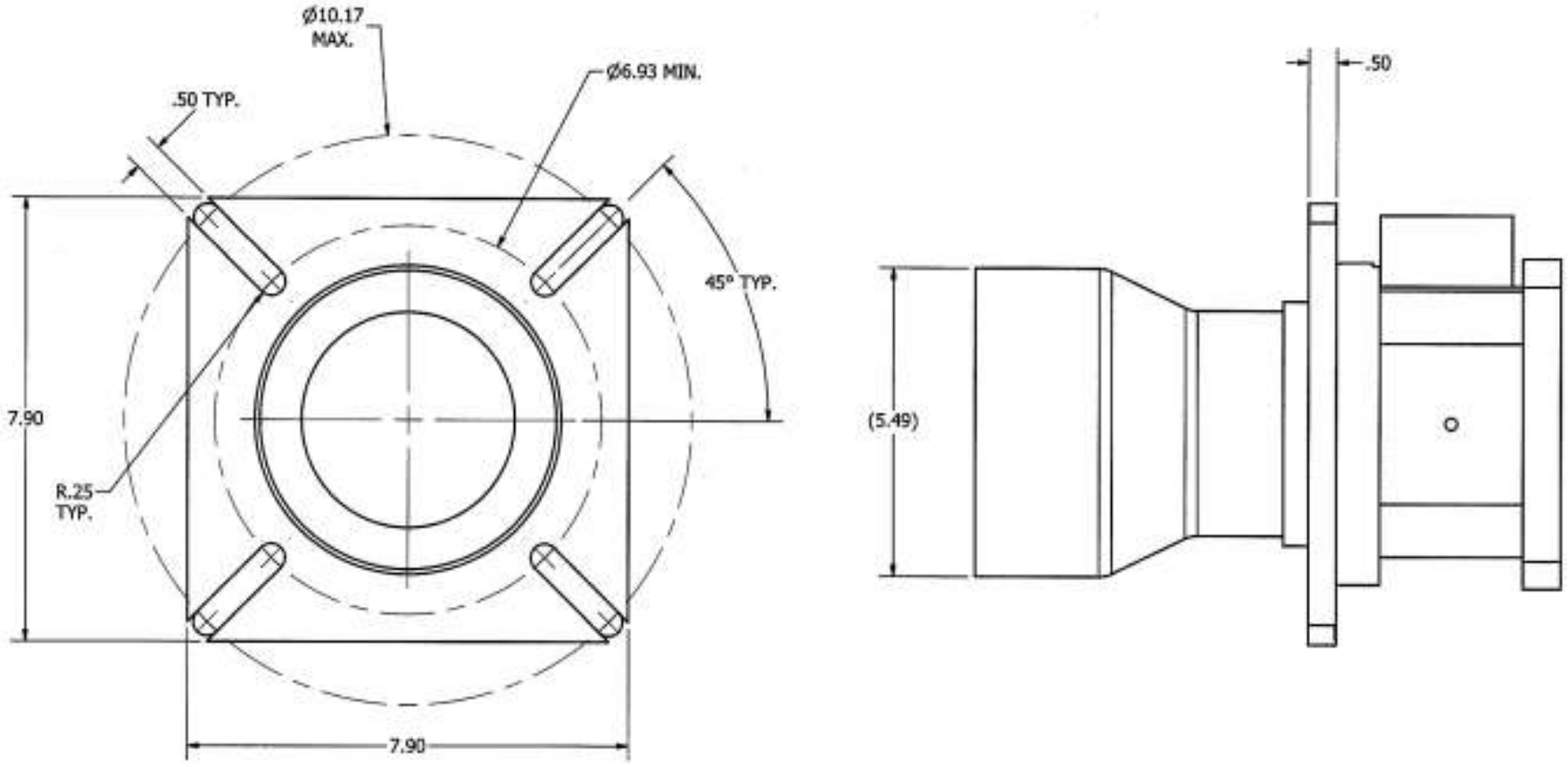

LC1500 MOUNTING FLANGE

Figure 29

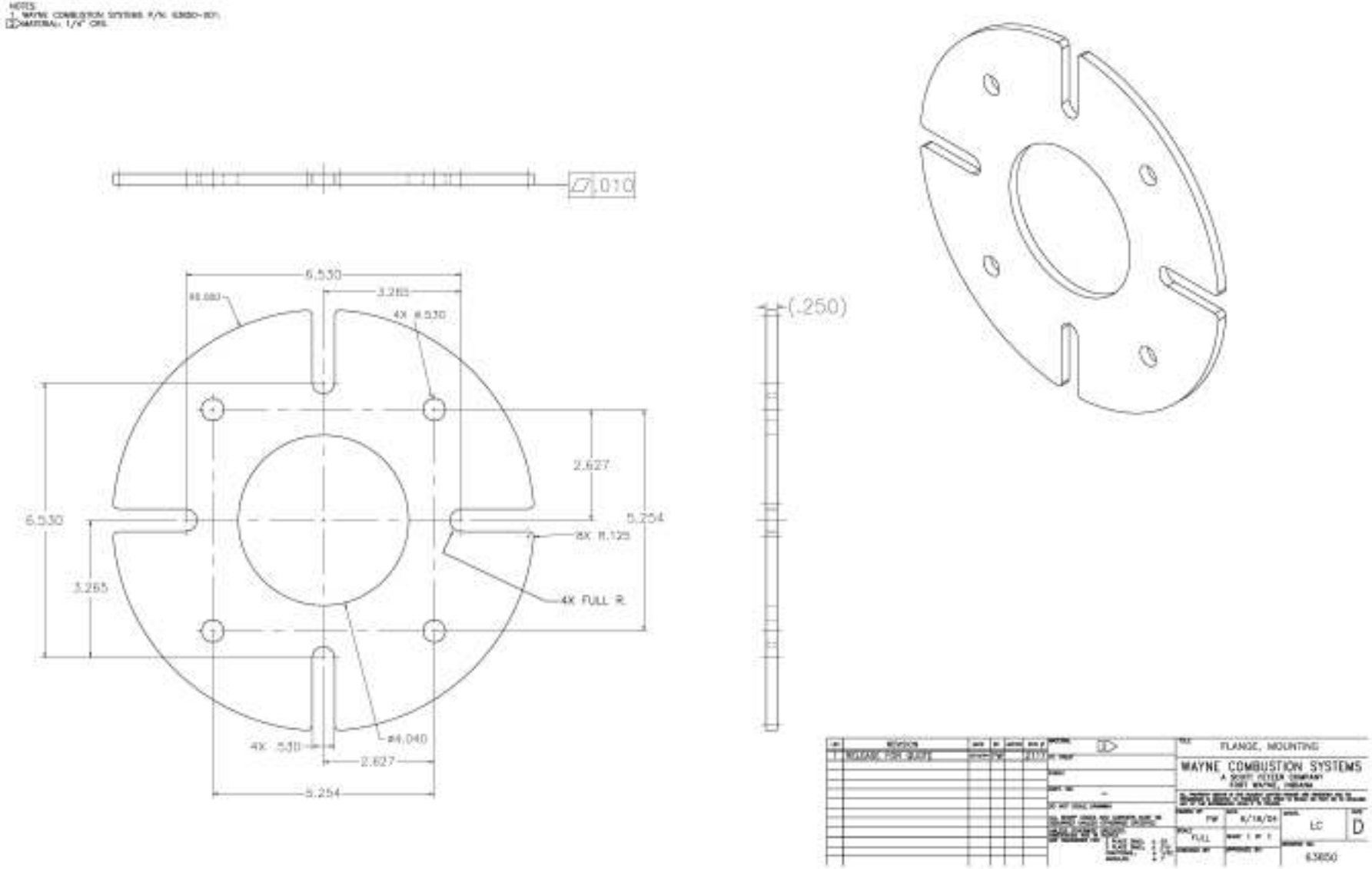
.010
6.530
3.265
4X Ø.530
2.627
6.530
5.254
8X R.125
3.265
4X FULL R
(.250)
4X .530
Ø4.040
2.627
5.254
FLANGE, MOUNTING
MAYNE COMBUSTION SYSTEMS
LC
D
63850

Figure 30

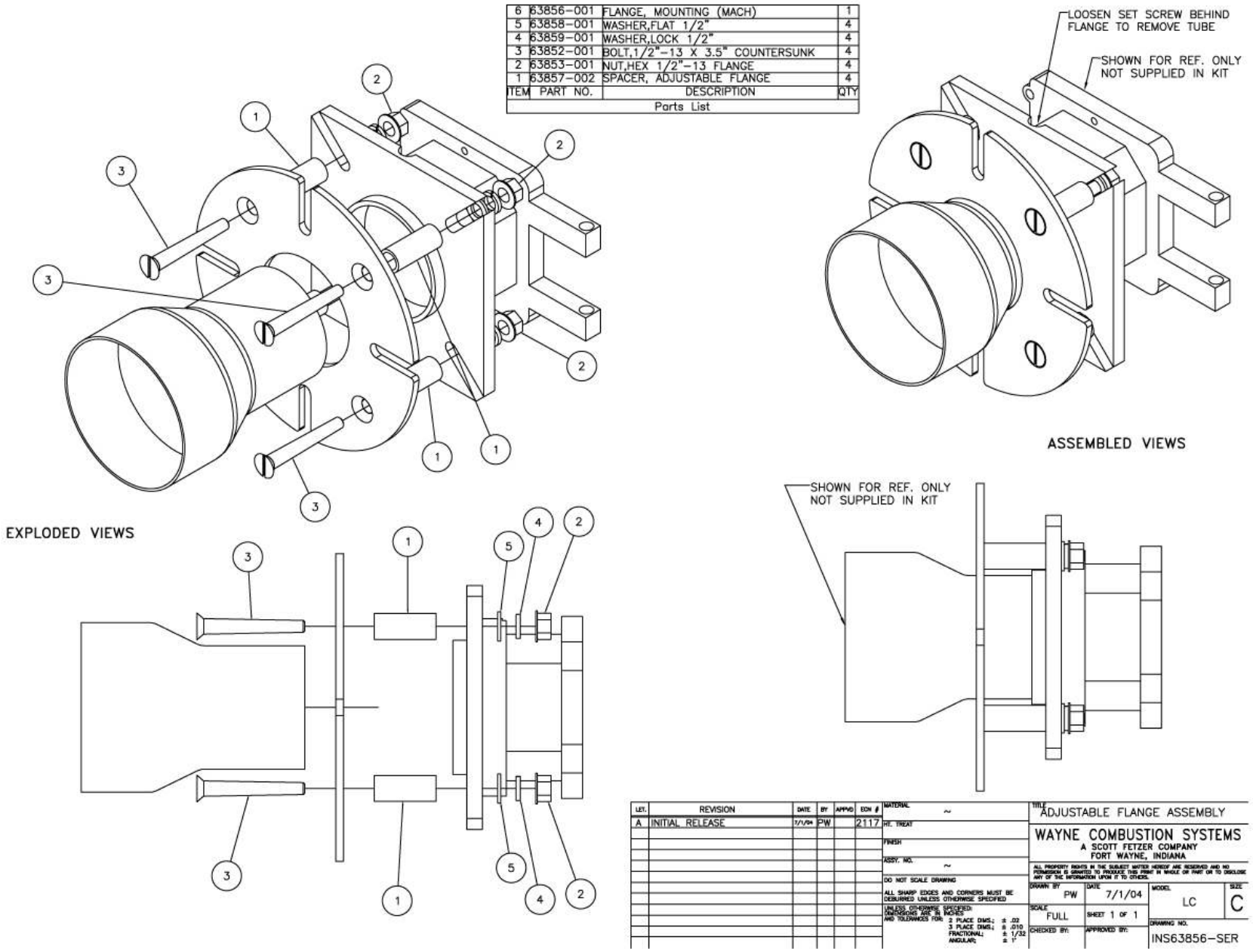

Figure 30 (continued)

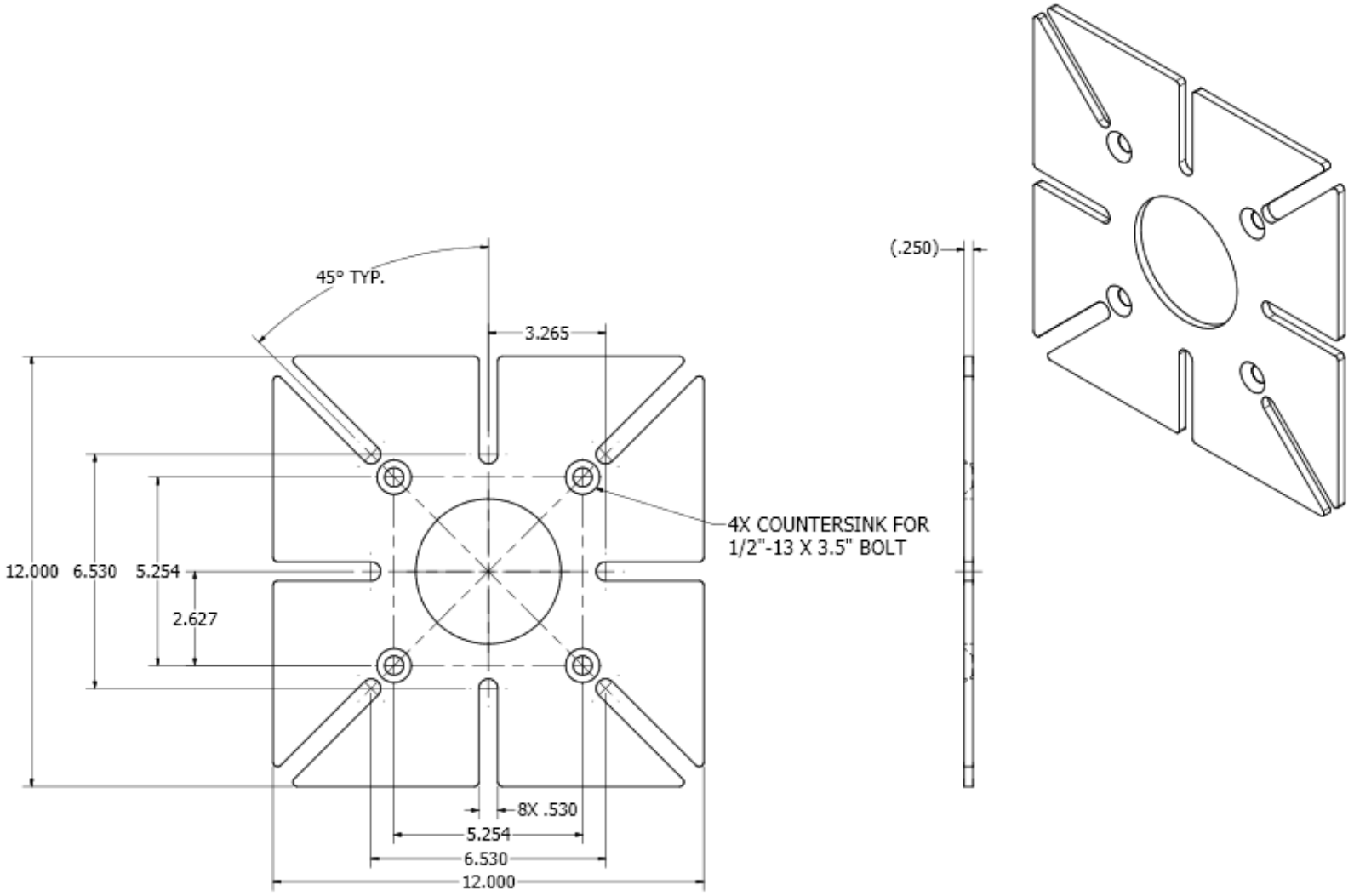

LC1500 MOUNTING FLANGE 12”

Figure 31

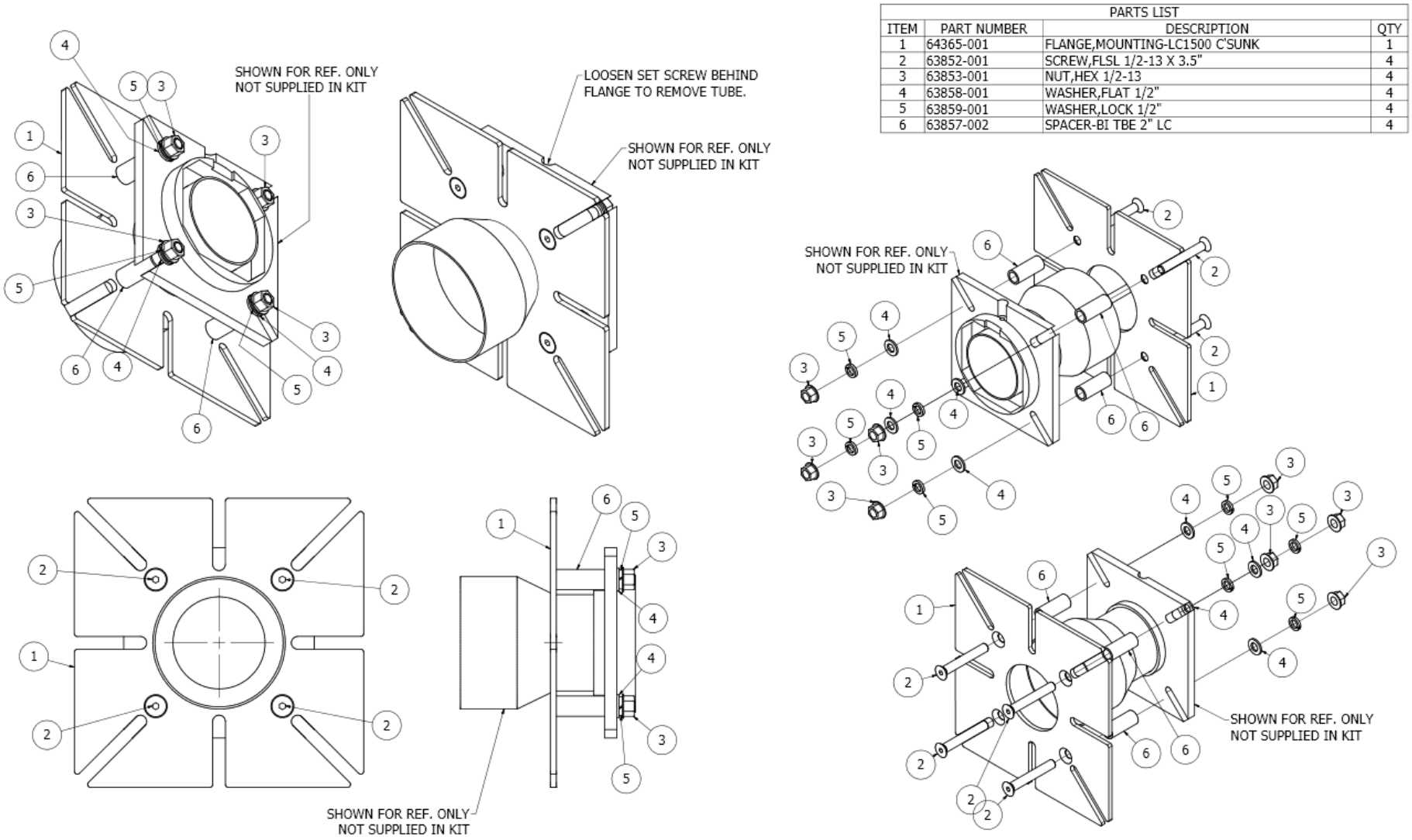

PARTS LIST			
ITEM	PART NUMBER	DESCRIPTION	QTY
1	64365-001	FLANGE,MOUNTING-LC1500 C'SUNK	1
2	63852-001	SCREW,FLSL 1/2-13 X 3.5"	4
3	63853-001	NUT,HEX 1/2-13	4
4	63858-001	WASHER,FLAT 1/2"	4
5	63859-001	WASHER,LOCK 1/2"	4
6	63857-002	SPACER-BI TBE 2" LC	4

Figure 31 (continued

LIMITED WARRANTIES FOR OIL AND GAS BURNERS, MADE BY WAYNE AND USED IN RESIDENTIAL INSTALLATIONS

WAYNE COMBUSTION SYSTEMS ("WAYNE" warrants to those who purchase its **Oil Burner Model** for resale or for incorporation into a product of resale that its burner is free from defects in material an workmanship under normal use and service for thirty-si (36) months from the date of manufacture. **ALL GA BURNERS** manufactured by "WAYNE" will be similarl warranted for eighteen(18) months from date c manufacture except where original manufacture offers a greater warranty. (Reference #6 below) THESE LIMITE WARRANTIES DO NOT APPLY UNLESS THE BURNE COVERED BY IT **IS PROPERLY INSTALLED BY QUALIFIED, COMPETENT TECHNICIAN**, WHO I LICENSED WHERE STATE AND/OR LOCAL CODE PREVAIL, AND **WHO IS EXPERIENCED IN MAKIN SUCH INSTALLATIONS**, in accordance with NFPA #3 of the national fire protection association and i accordance with all local, state and national codes.

Any **IN-WARRANTY** burner component which i defective in material or workmanship will be eithe repaired or replaced as follows:

1. Fuel pumps, motors, transformers, gas valves, an controls should be returned to an authorized servic station or distributor of WAYNE for determination c applicability of this LIMITED WARRANTY as t either repair or replacement, where said servic station or distributor is reasonably available in th customer's locality. The manufacturers of burne components regularly publish and distribute listing showing the locations of their network of servic stations. Where such local service is NOT availabl for the burner components described above or othe burner parts are involved, these items should b returned, freight prepaid, to WAYNE Servic Department, 801 Glasgow Ave, Fort Wayne Indiana 46803.
2. Burners and/or component(s) determined to b covered under this LIMITED WARRANTY b WAYNE shall be repaired or replaced at WAYNE' sole option.
3. WAYNE is not responsible for any labor cost for th removal and replacement of said burner or burne components and equipment associated therewith.
4. A burner so repaired will then carry the LIMITED WARRANTY equal to the unexpired portion of the original burner LIMITED WARRANTY.
5. If inspection by WAYNE does **NOT** disclose any defect covered by this LIMITED WARRANTY, the burner or burner component(s) will be either repaired or replaced at the expense of the customer and WAYNE"S regular charges will apply.
6. If the original manufacturer of a burner component offers a warranty greater than either of our LIMITED WARRANTIES described above, then this portion will be added to our LIMITED WARRANTY.

This LIMITED WARRANTY does **NOT** cover products which have been damaged as the result of accident, abuse, misuse, neglect, improper installations, improper maintenance or failure to operate in accordance with WAYNE's written instructions.

These LIMITED WARRANTIES do not extend to anyone except the first purchaser at retail and only when the burner is in the original installation site.

IMPLIED WARRANTIES OF MERCHANTABILITY AND FITNESS FOR A PARTICULAR PURPOSE SHALL BE LIMITED TO THE DURATION OF THE LIMITED EXPRESS WARRANTIES CONTAINED HEREIN. WAYNE EXPRESSLY DISCLAIMS AND EXCLUDES ANY LIABILITY FOR CONSEQUENTIAL OR INCIDENTAL DAMAGES OF ANY NATURE FOR BREACH OF ANY EXPRESS OR IMPLIED WARRANTY.

Some states do not allow limitation on how long an implied warranty lasts, so the above limitation may not apply to you. Also, some states do not allow the exclusion or limitation of incidental or consequential damages, so the above limitation or exclusion may not apply to you. WAYNE neither assumes or authorizes any person to assume for WAYNE any other liability or obligation in connection with the sale of these products. This warranty gives you specific legal rights, and you may also have other rights which vary from state to state.

CONSUMER INSTRUCTIONS

Keep the area around the burner clear and free of combustible materials, gasoline or other flammable liquids or vapors. Do not obstruct burner air openings or ventilation grilles for combustion air. If the burner is to be shut down for an extended time, the main manual gas valve should be closed as a precaution.

***CAUTION**:* Check the burner flame periodically. A proper NATURAL gas flame will appear blue at the burner face with orange and yellow tips. A proper PROPANE gas flame will appear blue at the burner face with yellow tips. If the flame is too rich, it will appear billowy and yellow with hazy tips, if too lean, it will appear short and all blue. Burner cleaning and/or readjustment is indicated by flames that are too rich or too lean.

WARNING: If any flame is observed when the burner is on standby, or if the ignition spark or valve operator is heard to come on before the motor reaches operating speed, immediately turn off the manual gas control and main power. A dangerous condition has developed and must be corrected.

CONTACT A QUALIFIED SERVICE TECHNICIAN FOR CLEANING, READJUSTMENT OR REPAIR.

LIGHTING INSTRUCTIONS:
See Section II Initial Start Up
1. Turn Main Electrical Disconnect Power Switch On.
2. Open All Manual Gas Valves.
3. Set Thermostat Or Operating Control To Call For Heat.
4. Turn Burner On-Off Switch To The On Position.

Wait 30 Seconds. If Burner Has Failed To Light, Or If Burner Lights Then Goes Out, Turn Burner Off For 30 Seconds And Then Back On For Restart.

TO SHUT OFF:
1. Turn Main Power Switch Off Or Turn Burner Switch Off.
2. Shut All Manual Gas Valves.

START-UP & SERVICE NOTES

Record the installation data, the combustion readings, etc., and affix to this manual, or the burner and/or appliance. Space has been provided for start-up notes, dealer's name, address, service telephone numbers, emergency telephone numbers, as well as the date of installation.

Page Intentionally Left Blank

NOTES